⚠ Safety Precautions

- Important Notes on exporting this product or equipment containing this product;
  If the end-user or application of this product is related to military affairs or weapons, its export may be controlled by “Foreign Exchange and Foreign Trade Control Law” of Japan where export license will be required before product can be exported from Japan.
- This product is designed and manufactured for use in General Purpose Industrial Equipment and it is not intended to be used in equipment or system that may cause personal injury or death.
- All servicing such as installation, wiring, operation, maintenance and etc., should be performed by qualified personnel only.
- Tighten mounting screws with an adequate torque by taking into consideration strength of the screws and the characteristics of material to which the product will be mounted. Over tightening can damage the screw and/or material; under tightening can result in loosening.
- Install safety equipment to prevent serious accidents or loss that is expected in case of failure of this product.
- Consult us before using this product under such special conditions and environments as nuclear energy control, aerospace, transportation, medical equipment, various safety equipments or equipments which require a lesser air contamination.
- We have been making the best effort to ensure the highest quality of our products, however, some applications with exceptionally large external noise disturbance and static electricity, or failure in input power, wiring and components may result in unexpected action. It is highly recommended that you make a fail-safe design and secure the safety in the operative range.
- If the motor shaft is not electrically grounded, it may cause an electrolytic corrosion to the bearing, depending on the condition of the machine and its mounting environment, and may result in the bearing noise. Checking and verification by customer is required.
- Failure of this product depending on its content may generate smoke of about one cigarette. Take this into consideration when the application of the machine is clean room related.
- Please be careful when using the product in an environment with high concentrations of sulfur or sulfuric gases, as sulfuration can lead to disconnection from the chip resistor or a poor contact connection.
- Do not input a supply voltage which significantly exceeds the rated range to the power supply of this product. Failure to heed this caution may lead to damage of the internal parts, causing smoke and/or fire and other troubles.
- The user is responsible for matching between machine and components in terms of configuration, dimensions, life expectancy, characteristics, when installing the machine or changing specification of the machine. The user is also responsible for complying with applicable laws and regulations.
- Manufacturer’s warranty will be invalid if the product has been used outside its stated specifications.
- Component parts are subject to minor change to improve performance.
- Read and observe the instruction manual to ensure correct use of the product.

Repair	Consult to the dealer from whom you have purchased this product for details of repair work. When the product is incorporated to the machine you have purchased, consult to the machine manufacturer or its dealer.
URL	Electronic data of this product (Instruction Manual, CAD data) can be downloaded from the following web site; industrial.panasonic.com/ac/e/

● Contact to : _____

Panasonic
INDUSTRY

Panasonic Industry Co., Ltd.,
Industrial Device Business Division
1-1 Morofuku 7-chome, Daito, Osaka 574-0044, Japan

Panasonic Industrial Search

© Panasonic Industry Co., Ltd.

Unauthorized reproduction from this document is strictly prohibited.
■AQCTB0106E 202309-y

2023.9

AC Servo Motor & Driver <MINAS A6 Family 400 V Series>

2023.9

Panasonic
INDUSTRY

AC Servo Motor & Driver

MINAS A6 Family 400 V Series

IN Better Solution

● This product is for industrial equipment. Don't use this product at general household.

Motor line-up

MINAS A6
400 V Series

- Battery-less absolute encoder motor : Absolute system can be configured without the battery.
- European connector motor : Angled receptacle.

	200 W	400 W	750 W	850 W	1000 W	1.0 kW	1.3 kW		1.5 kW	1.8 kW	2.0 kW	2.4 kW	2.9 kW	3.0 kW	4.0 kW	4.4 kW	5.0 kW
Low inertia **MSMF** 400 V						100 sq.			100 sq.		100 sq.			120 sq.	130 sq.		130 sq.
Rated speed (Max. speed)						3000 r/min(5500 r/min)			3000 r/min(5500 r/min)						3000 r/min(5000 r/min)		
Middle inertia **MDMF** 400 V						130 sq.			130 sq.		130 sq.			130 sq.	176 sq.		176 sq.
Rated speed (Max. speed)						2000 r/min(3500 r/min)			2000 r/min(3500 r/min)								2000 r/min(3000 r/min)
Middle inertia/ Low speed high torque **MGMF** 400 V				130 sq.			130 sq.			130 sq.		176 sq.	176 sq.			176 sq.	
Rated speed (Max. speed)				1500 r/min(3500 r/min)			1500 r/min(3500 r/min)			1500 r/min(3500 r/min)		1500 r/min(3000 r/min)	1500 r/min(3500 r/min)			1500 r/min(3000 r/min)	
High inertia **MHMF** 400 V	60 sq.	60 sq.	80 sq.		80 sq.	130 sq.			130 sq.		176 sq.			176 sq.	176 sq.		176 sq.
Rated speed (Max. speed)	3000 r/min(6500 r/min)		3000 r/min(6000 r/min)			2000 r/min(3500 r/min)			2000 r/min(3500 r/min)								2000 r/min(3000 r/min)

Table description: 60 sq. — Flange sq. dimension [Unit: mm]

- Please avoid the motor, or equipment containing the motor to be distributed to Japan, or other regions through Japan.

INDEX

A6 Family 400 V series Line - up..... 1
Model Designation..... 4
Table of Part Numbers and Options 5

Motor

Motor Specifications 7
Dimensions of Motor 17
Motor Specification Description..... 23

Driver

Driver Specifications..... 25
A6SF series 25
A6NF series 27
Dimensions of Driver 29

- Please refer to the A6BF series specifications homepage.

MINAS A6 Multi Servo Drive System

Launched in European market only

MINAS A6 Multi : New 400 V Servo Drive System

Multi-axis drive system for compact and safe automation solutions targeting Europe as the main target.

1. **Saving Space (2-axis control, book style design)**
2. **Reduced wiring (DC link, EtherCAT)**
3. **Advanced safety integrated**
4. **Reduce installation and maintenance hours (DC link, EoE, FoE*1, FSoE*1)**
5. **European connector motor**
6. **Battery less / safety encoder*1**

*1 Under development planning

Driver line-up

MINAS A6
400 V Series

●Lineup of three types of network driver EtherCAT, Realtime Express, Modbus.

	Rotary motor Multifunction type A6SF series	Linear motor / DD motor Multifunction type A6SM series Special order product
Position control	●	●
Block operation	(External contact signal or Modbus communication)	(External contact signal or Modbus communication)
Speed control	●	●
Internal velocity command*1	(External contact signal or Modbus communication)	(External contact signal or Modbus communication)
Torque control	●	●
Full-close control	●	●
Block operation	(External contact signal or Modbus communication)	
Pulse	●	●
Analog	●	●
Modbus	●	●
External scale	●	●
RS-232/RS-485	●	●
STO (Safety Torques Off)	●	●

High speed communication For Realtime Express Network servo driver

RTEX Realtime Express

		Rotary motor Multifunction type A6NF series	Linear motor / DD motor Multifunction type A6NM series Special order product
Control mode	Position/Speed/ Torque control	●	●
Control mode	Full-close control	●	●
Interface	External scale	●	●
Interface	STO (Safety Torques Off)	●	●

Servo drivers with EtherCAT open network

EtherCAT

		Rotary motor Multifunction type A6BF series Special order product	Linear motor / DD motor Multifunction type A6BM series Special order product
Control mode	Position/Speed/ Torque control	●	●
Control mode	Full-close control	●	●
Interface	External scale	●	●
Interface	STO (Safety Torques Off)	●	●

*1 When using internal speed command with Modbus, external servo ON is required. ●Please check the instruction manual for necessary wiring. Special order product For more information, please visit our website or request to our distributors separately. ●Please refer to the A6BF series specifications homepage.

Model Designation

Refer to P.5 to P.6 for motor and driver combinations.

Servo Motor

M S M F 1 0 4 L 1 C 9 M — Special specifications M: Special order product*1

① ② ③ ④ ⑤ ⑥ ⑦

*1 Please avoid the motor, or equipment containing the motor to be distributed to Japan, or other regions through Japan.

① Type

Symbol	Type	
MSM	Low inertia	(1.0 kW to 5.0 kW)
MDM	Middle inertia	(1.0 kW to 5.0 kW)
MGM	Middle inertia	(0.85 kW to 4.4 kW)
MHM	High inertia	(0.2 kW to 5.0 kW)

② Series

Symbol	Series name
F	A6 Family

③ Motor rated output

Symbol	Rated output	Symbol	Rated output
02	200 W	18	1.8 kW
04	400 W	20	2.0 kW
08	750 W	24	2.4 kW
09	0.85 kW (130 sq) 1000 W (80 sq)	29	2.9 kW
		30	3.0 kW
10	1.0 kW	40	4.0 kW
13	1.3 kW	44	4.4 kW
15	1.5 kW	50	5.0 kW

④ Voltage specifications

Symbol	Specifications
4	400 V

⑤ Rotary encoder specifications

Symbol	Format	Pulse counts	Resolution	Wires
L	Absolute	23-bit	8388608	7
A	Batteryless absolute	23-bit	8388608	5

<Note>
When using a rotary encoder as an incremental system (not using multi-turn data), do not connect a battery for absolute encoder.

⑥ Design order

Symbol	Specifications
1	Standard

⑦ Motor specifications: 100 mm sq. to 176 mm sq.

MSMF 1.0 kW to 5.0 kW
MDMF 1.0 kW to 5.0 kW
MGMF 850 W to 4.4 kW
MHMF 1.0 kW to 5.0 kW

Symbol		Shaft		Holding brake		Oil seal	
		Round	Key-way	without	with	without	With protective lip
C	9	●		●		●	
C	A	●		●			●
D	9	●			●	●	
D	A	●			●		●
G	9		●	●		●	
G	A		●	●			●
H	9		●		●	●	
H	A		●		●		●

⑦ Motor specifications: 80 mm sq. or less

MHMF 200 W to 1000 W

Symbol		Shaft		Holding brake		Oil seal	
		Round	Key-way	without	with	without	With protective lip
A	9	●		●		●	
B	9	●			●	●	
C	9	●		●			●
D	9	●			●		●
S	9		●	●		●	
T	9		●		●	●	
U	9		●	●			●
V	9		●		●		●

Servo Driver

M D D L T 5 4 S F * * * — Special specifications

① ② ③ ④ ⑤ ⑥ ⑦

① Frame symbol

Symbol	Frame
MDD	D-Frame
MED	E-Frame
MFD	F-Frame

② Series

Symbol	Series name
L	A6 Family

③ Safety Function

Symbol	Specifications
T	with the safety function

④ Max. current rating

Indicates the difference in the applicable motor (or output rating).

⑤ Supply voltage specifications

Symbol	Specifications
4	3-phase 400 V

⑥ I/f specifications / ⑦ Classification of type

Symbol (specification)	Symbol	Specification
S (Analog/Pulse)	F	Multi fanction type (Pulse, analog, full-closed)
	M	Multifunction for linear/DD motor
N (RTEX)	F	Multifunction for rotary motor
	M	Multifunction for linear/DD motor
B (EtherCAT)	F	Multifunction for rotary motor
	M	Multifunction for linear/DD motor

200 W to 5.0 kW 3-phase 400 V Series

Motor						Driver					
Motor series		Power supply	Output	Part No. Note)1 Special Order Product	Rating/ Spec. (page)	A6SF series Multifunction type (Pulse, analog, full-closed)		A6NF series Realtime Express Network Multifunction type (full-closed)	A6BF series EtherCAT open network Multifunction type (full-closed) Special Order Product	Frame	Power capacity (at rated load) (kVA)
Low inertia	MSMF type 3000 r/min	3-phase 400 V	1.0 kW	MSMF104○1□△M	7	MDDLT64SF		MDDLT64NF	MDDLT64BF	D-frame	Approx. 2.4
			1.5 kW	MSMF154○1□△M	7						Approx. 2.9
			2.0 kW	MSMF204○1□△M	7	MEDLT84SF		MEDLT84NF	MEDLT84BF	E-frame	Approx. 3.8
			3.0 kW	MSMF304○1□△M	8	MFDLTA4SF		MFDLTA4NF	MFDLTA4BF	F-frame	Approx. 5.2
			4.0 kW	MSMF404○1□△M	8	MFDLTB4SF		MFDLTB4NF	MFDLTB4BF		Approx. 7.8
			5.0 kW	MSMF504○1□△M	8						
Middle inertia	MDMF type 2000 r/min	3-phase 400 V	1.0 kW	MDMF104○1□△M	9	MDDLT54SF		MDDLT54NF	MDDLT54BF	D-frame	Approx. 2.4
			1.5 kW	MDMF154○1□△M	9	MDDLT64SF		MDDLT64NF	MDDLT64BF		Approx. 2.9
			2.0 kW	MDMF204○1□△M	9	MEDLT84SF		MEDLT84NF	MEDLT84BF	E-frame	Approx. 3.8
			3.0 kW	MDMF304○1□△M	10	MFDLTA4SF		MFDLTA4NF	MFDLTA4BF	F-frame	Approx. 5.2
			4.0 kW	MDMF404○1□△M	10	MFDLTB4SF		MFDLTB4NF	MFDLTB4BF		Approx. 7.8
			5.0 kW	MDMF504○1□△M	10						
	MGMF type 1500 r/min	3-phase 400 V	0.85 kW	MGMF094○1□△M	11	MDDLT54SF		MDDLT54NF	MDDLT54BF	D-frame	Approx. 2.4
			1.3 kW	MGMF134○1□△M	11	MDDLT64SF		MDDLT64NF	MDDLT64BF		Approx. 2.9
			1.8 kW	MGMF184○1□△M	11	MEDLT84SF		MEDLT84NF	MEDLT84BF	E-frame	Approx. 3.8
			2.4 kW	MGMF244○1□△M	12	MFDLTA4SF		MFDLTA4NF	MFDLTA4BF	F-frame	Approx. 5.2
			2.9 kW	MGMF294○1□△M	12	MFDLTB4SF		MFDLTB4NF	MFDLTB4BF		Approx. 7.8
			4.4 kW	MGMF444○1□△M	12						
High inertia	MHMF type 2000 r/min	3-phase 400 V	200 W	MHMF024○1□△M	13	MDDLT44SF		MDDLT44NF	MDDLT44BF	D-frame	Approx. 1.8
			400 W	MHMF044○1□△M	13						
			750 W	MHMF084○1□△M	13	MDDLT54SF		MDDLT54NF	MDDLT54BF		Approx. 2.4
			1000 W	MHMF094○1□△M	14	MDDLT64SF		MDDLT64NF	MDDLT64BF		Approx. 2.9
			1.0 kW	MHMF104○1□△M	14	MDDLT54SF		MDDLT54NF	MDDLT54BF	D-frame	Approx. 2.4
			1.5 kW	MHMF154○1□△M	14	MDDLT64SF		MDDLT64NF	MDDLT64BF		Approx. 2.9
			2.0 kW	MHMF204○1□△M	15	MEDLT84SF		MEDLT84NF	MEDLT84BF	E-frame	Approx. 3.8
			3.0 kW	MHMF304○1□△M	15	MFDLTA4SF		MFDLTA4NF	MFDLTA4BF	F-frame	Approx. 5.2
			4.0 kW	MHMF404○1□△M	15	MFDLTB4SF		MFDLTB4NF	MFDLTB4BF		Approx. 7.8
			5.0 kW	MHMF504○1□△M	16						

Note)1 ○□△ : Represents the motor specifications. (refer to “Model designation” P.4.)

● Please refer to the A6BF series specifications homepage.

Special Order Product | 400 V

MSMF 1.0 kW to 2.0 kW

[Low inertia 100 mm sq.] IP67

• Please contact us for more information.

Specifications

			1.0 kW	1.5 kW	2.0 kW
			AC400 V	AC400 V	AC400 V
Motor model *1			MSMF104○1□△M	MSMF154○1□△M	MSMF204○1□△M
Applicable driver *2	Model No.	Multifunction type	MDDLT64●F	MDDLT64●F	MEDLT84●F
	Frame symbol		D-frame	D-frame	E-frame
Power supply capacity		(kVA)	2.4	2.9	3.8
Rated output		(W)	1000	1500	2000
Rated torque		(N·m)	3.18	4.77	6.37
Continuous stall torque		(N·m)	3.82	5.73	7.64
Max. torque		(N·m)	9.55	14.3	19.1
Rated current		(A(rms))	3.3	4.2	5.7
Max. current		(A(o-p))	14	17.5	24
Rated speed		(r/min)	3000	3000	3000
Max. speed		(r/min)	5500	5500	5500
Rotor inertia ($\times10^{-4}$ kg·m^2)	Without brake		2.15	3.10	4.06
	With brake		2.47	3.45	4.41
Recommended moment of inertia ratio of the load and the rotor Note)1			15 times or less	15 times or less	15 times or less
Rotary encoder specifications *3			23-bit Absolute	23-bit Absolute	23-bit Absolute
	Resolution per single turn		8388608	8388608	8388608

• **Brake specifications** (For details, refer to P.24)

(This brake will be released when it is energized. Do not use this for braking the motor in motion.)

Static friction torque (N·m)	8.0 or more	8.0 or more	8.0 or more
Armature pull in time (ms)	50 or less	50 or less	50 or less
Armature release time (ms) Note)2	15 or less	15 or less	15 or less
Exciting current (at DC24 V) (A)	0.81±10 %	0.81±10 %	0.81±10 %
Releasing voltage (DC) (V)	2 or more	2 or more	2 or more
Exciting voltage (DC) (V)	24±2.4	24±2.4	24±2.4

• **Permissible load** (For details, refer to P.23)

When assembling	Radial load (N)	980	980	980
	Thrust load Direction A (N)	588	588	588
	Thrust load Direction B (N)	686	686	686
When operating	Radial load (N)	490	490	490
	Thrust load A, B-direction (N)	196	196	196

• For details of Note)1 and Note)2, refer to P.23.
• Dimensions of Motor, refer to P.17.
*1 ○□△ : Represents the motor specifications. (refer to "Model designation" P.4.)
*2 ● : Represents the driver specifications. (refer to "Model designation" P.4.)
*3 When using a rotary encoder as an incremental system (not using multi-turn data), do not connect a battery for absolute encoder.

Torque characteristics (at AC400 V of power voltage <Dotted line represents the torque at 10 % less supply voltage.>)

With oil seal

1.0 kW

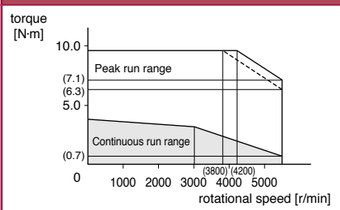

1.5 kW

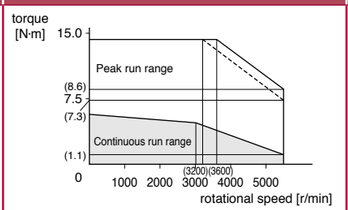

2.0 kW

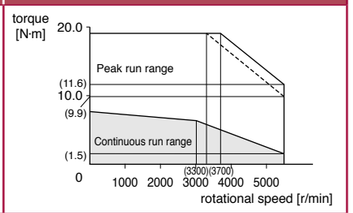

<Cautions> Reduce the moment of inertia ratio if high speed response operation is required.
Dimensions are subject to change without notice. Contact us or a dealer for the latest information.
Read the Instruction Manual carefully and understand all precautions and remarks before using the products.
Please avoid the motor, or equipment containing the motor to be distributed to Japan, or other regions through Japan.

Special Order Product | 400 V

MSMF 3.0 kW to 5.0 kW

[Low inertia 120 mm sq./ 130 mm sq.] IP67

• Please contact us for more information.

Specifications

			3.0 kW	4.0 kW	5.0 kW
			AC400 V	AC400 V	AC400 V
Motor model *1			MSMF304○1□△M	MSMF404○1□△M	MSMF504○1□△M
Applicable driver *2	Model No.	Multifunction type	MFDLTA4●F	MFDLTB4●F	MFDLTB4●F
	Frame symbol		F-frame	F-frame	F-frame
Power supply capacity		(kVA)	5.2	7.8	7.8
Rated output		(W)	3000	4000	5000
Rated torque		(N·m)	9.55	12.7	15.9
Continuous stall torque		(N·m)	11.0	15.3	19.1
Max. torque		(N·m)	28.7	38.2	47.8
Rated current		(A(rms))	9.2	9.9	12.0
Max. current		(A(o-p))	38.5	42.7	53.6
Rated speed		(r/min)	3000	3000	3000
Max. speed		(r/min)	5500	5000	5000
Rotor inertia ($\times10^{-4}$ kg·m^2)	Without brake		7.04	14.4	19.0
	With brake		7.38	15.6	20.2
Recommended moment of inertia ratio of the load and the rotor Note)1			15 times or less	15 times or less	15 times or less
Rotary encoder specifications *3			23-bit Absolute	23-bit Absolute	23-bit Absolute
	Resolution per single turn		8388608	8388608	8388608

• **Brake specifications** (For details, refer to P.24)

(This brake will be released when it is energized. Do not use this for braking the motor in motion.)

Static friction torque (N·m)	12.0 or more	16.2 or more	22.0 or more
Armature pull in time (ms)	80 or less	110 or less	110 or less
Armature release time (ms) Note)2	15 or less	50 or less	50 or less
Exciting current (at DC24 V) (A)	0.81±10 %	0.90±10 %	0.90±10 %
Releasing voltage (DC) (V)	2 or more	2 or more	2 or more
Exciting voltage (DC) (V)	24±2.4	24±2.4	24±2.4

• **Permissible load** (For details, refer to P.23)

When assembling	Radial load (N)	980	980	980
	Thrust load Direction A (N)	588	588	588
	Thrust load Direction B (N)	686	686	686
When operating	Radial load (N)	490	784	784
	Thrust load A, B-direction (N)	196	343	343

• For details of Note)1 and Note)2, refer to P.23.
• Dimensions of Motor, refer to P.17.
*1 ○□△ : Represents the motor specifications. (refer to "Model designation" P.4.)
*2 ● : Represents the driver specifications. (refer to "Model designation" P.4.)
*3 When using a rotary encoder as an incremental system (not using multi-turn data), do not connect a battery for absolute encoder.

Torque characteristics (at AC400 V of power voltage <Dotted line represents the torque at 10 % less supply voltage.>)

With oil seal

3.0 kW

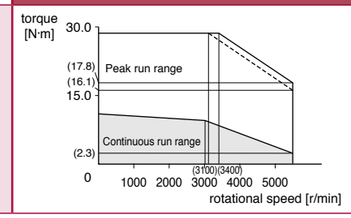

4.0 kW

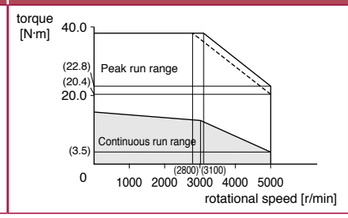

5.0 kW

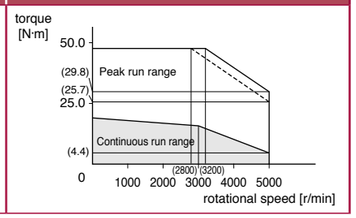

<Cautions> Reduce the moment of inertia ratio if high speed response operation is required.
Dimensions are subject to change without notice. Contact us or a dealer for the latest information.
Read the Instruction Manual carefully and understand all precautions and remarks before using the products.
Please avoid the motor, or equipment containing the motor to be distributed to Japan, or other regions through Japan.

Special Order Product | 400 V

MDMF 1.0 kW to 2.0 kW

[Middle inertia 130 mm sq.] IP67

• Please contact us for more information.

Specifications

		1.0 kW	1.5 kW	2.0 kW
		AC400 V	AC400 V	AC400 V
Motor model *1		MDMF104○1□△M	MDMF154○1□△M	MDMF204○1□△M
Applicable driver *2	Model No. Multifunction type	MDDLT54●F	MDDLT64●F	MEDLT84●F
	Frame symbol	D-frame	D-frame	E-frame
Power supply capacity (kVA)		2.4	2.9	3.8
Rated output (W)		1000	1500	2000
Rated torque (N·m)		4.77	7.16	9.55
Continuous stall torque (N·m)		5.25	7.52	10.0
Max. torque (N·m)		14.3	21.5	28.7
Rated current (A(rms))		2.6	4.0	4.9
Max. current (A(o-p))		11.4	17.0	21.6
Rated speed (r/min)		2000	2000	2000
Max. speed (r/min)		3500	3500	3500
Rotor inertia ($\times10^{-4}$ kg·m^2)	Without brake	6.18	9.16	12.1
	With brake	7.40	10.40	13.3
Recommended moment of inertia ratio of the load and the rotor Note)1		10 times or less	10 times or less	10 times or less
Rotary encoder specifications *3		23-bit Absolute	23-bit Absolute	23-bit Absolute
	Resolution per single turn	8388608	8388608	8388608

• **Brake specifications** (For details, refer to P.24)

(This brake will be released when it is energized. Do not use this for braking the motor in motion.)

	1.0 kW	1.5 kW	2.0 kW
Static friction torque (N·m)	13.7 or more	13.7 or more	13.7 or more
Armature pull in time (ms)	100 or less	100 or less	100 or less
Armature release time (ms) Note)2	50 or less	50 or less	50 or less
Exciting current (at DC24 V) (A)	0.79±10 %	0.79±10 %	0.79±10 %
Releasing voltage (DC) (V)	2 or more	2 or more	2 or more
Exciting voltage (DC) (V)	24±2.4	24±2.4	24±2.4

• **Permissible load** (For details, refer to P.23)

		1.0 kW	1.5 kW	2.0 kW
When assembling	Radial load (N)	980	980	980
	Thrust load Direction A (N)	588	588	588
	Thrust load Direction B (N)	686	686	686
When operating	Radial load (N)	490	490	490
	Thrust load A, B-direction (N)	196	196	196

• For details of Note)1 and Note)2, refer to P.23.
• Dimensions of Motor, refer to P.18.
*1 ○□△ : Represents the motor specifications. (refer to "Model designation" P.4.)
*2 ● : Represents the driver specifications. (refer to "Model designation" P.4.)
*3 When using a rotary encoder as an incremental system (not using multi-turn data), do not connect a battery for absolute encoder.

Torque characteristics (at AC400 V of power voltage <Dotted line represents the torque at 10 % less supply voltage.>)

With oil seal

1.0 kW

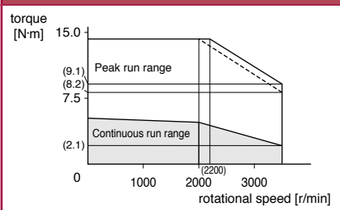

1.5 kW

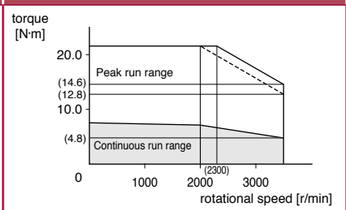

2.0 kW

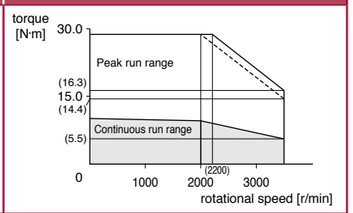

<Cautions> Reduce the moment of inertia ratio if high speed response operation is required.
Dimensions are subject to change without notice. Contact us or a dealer for the latest information.
Read the Instruction Manual carefully and understand all precautions and remarks before using the products.
Please avoid the motor, or equipment containing the motor to be distributed to Japan, or other regions through Japan.

Special Order Product | 400 V

MDMF 3.0 kW to 5.0 kW

[Middle inertia 130 mm sq./ 176 mm sq.] IP67

• Please contact us for more information.

Specifications

		3.0 kW	4.0 kW	5.0 kW
		AC400 V	AC400 V	AC400 V
Motor model *1		MDMF304○1□△M	MDMF404○1□△M	MDMF504○1□△M
Applicable driver *2	Model No. Multifunction type	MFDLTA4●F	MFDLTB4●F	MFDLTB4●F
	Frame symbol	F-frame	F-frame	F-frame
Power supply capacity (kVA)		5.2	7.8	7.8
Rated output (W)		3000	4000	5000
Rated torque (N·m)		14.3	19.1	23.9
Continuous stall torque (N·m)		15.0	22.0	26.3
Max. torque (N·m)		43.0	57.3	71.6
Rated current (A(rms))		8.2	10.1	11.8
Max. current (A(o-p))		36.4	42.5	51.0
Rated speed (r/min)		2000	2000	2000
Max. speed (r/min)		3500	3500	3000
Rotor inertia ($\times10^{-4}$ kg·m^2)	Without brake	18.6	46.9	58.2
	With brake	19.6	52.3	63.0
Recommended moment of inertia ratio of the load and the rotor Note)1		10 times or less	10 times or less	10 times or less
Rotary encoder specifications *3		23-bit Absolute	23-bit Absolute	23-bit Absolute
	Resolution per single turn	8388608	8388608	8388608

• **Brake specifications** (For details, refer to P.24)

(This brake will be released when it is energized. Do not use this for braking the motor in motion.)

	3.0 kW	4.0 kW	5.0 kW
Static friction torque (N·m)	22.0 or more	25.0 or more	44.1 or more
Armature pull in time (ms)	110 or less	80 or less	150 or less
Armature release time (ms) Note)2	50 or less	25 or less	30 or less
Exciting current (at DC24 V) (A)	0.90±10 %	1.29±10 %	1.29±10 %
Releasing voltage (DC) (V)	2 or more	2 or more	2 or more
Exciting voltage (DC) (V)	24±2.4	24±2.4	24±2.4

• **Permissible load** (For details, refer to P.23)

		3.0 kW	4.0 kW	5.0 kW
When assembling	Radial load (N)	980	1666	1666
	Thrust load Direction A (N)	588	784	784
	Thrust load Direction B (N)	686	980	980
When operating	Radial load (N)	784	784	784
	Thrust load A, B-direction (N)	343	343	343

• For details of Note)1 and Note)2, refer to P.23.
• Dimensions of Motor, refer to P.18.
*1 ○□△ : Represents the motor specifications. (refer to "Model designation" P.4.)
*2 ● : Represents the driver specifications. (refer to "Model designation" P.4.)
*3 When using a rotary encoder as an incremental system (not using multi-turn data), do not connect a battery for absolute encoder.

Torque characteristics (at AC400 V of power voltage <Dotted line represents the torque at 10 % less supply voltage.>)

With oil seal

3.0 kW

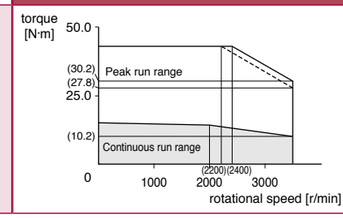

4.0 kW

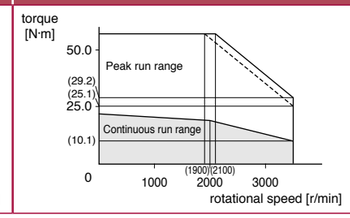

5.0 kW

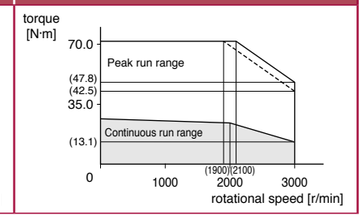

<Cautions> Reduce the moment of inertia ratio if high speed response operation is required.
Dimensions are subject to change without notice. Contact us or a dealer for the latest information.
Read the Instruction Manual carefully and understand all precautions and remarks before using the products.
Please avoid the motor, or equipment containing the motor to be distributed to Japan, or other regions through Japan.

Special Order Product | 400 V

MGMF 0.85 kW to 1.8 kW

[Middle inertia Low speed/ High torque type 130 mm sq.] IP67

• Please contact us for more information.

Specifications

			0.85 kW	1.3 kW	1.8 kW
			AC400 V	AC400 V	AC400 V
Motor model *1			MGMF094○1□△M	MGMF134○1□△M	MGMF184○1□△M
Applicable driver *2	Model No.	Multifunction type	MDDLT54●F	MDDLT64●F	MEDLT84●F
	Frame symbol		D-frame	D-frame	E-frame
Power supply capacity		(kVA)	2.4	2.9	3.8
Rated output		(W)	850	1300	1800
Rated torque		(N·m)	5.41	8.28	11.5
Continuous stall torque		(N·m)	5.41	8.28	11.5
Max. torque		(N·m)	14.3	23.3	28.8
Rated current		(A(rms))	3.0	4.8	5.9
Max. current		(A(o-p))	11.0	18.5	21.0
Rated speed		(r/min)	1500	1500	1500
Max. speed		(r/min)	3500	3500	3500
Rotor inertia ($\times10^{-4}$ kg·m^2)	Without brake		6.18	9.16	12.1
	With brake		7.40	10.4	13.3
Recommended moment of inertia ratio of the load and the rotor Note)1			10 times or less	10 times or less	10 times or less
Rotary encoder specifications *3			23-bit Absolute	23-bit Absolute	23-bit Absolute
	Resolution per single turn		8388608	8388608	8388608

• **Brake specifications** (For details, refer to P.24)

(This brake will be released when it is energized. Do not use this for braking the motor in motion.)

Static friction torque (N·m)	13.7 or more	13.7 or more	13.7 or more
Armature pull in time (ms)	100 or less	100 or less	100 or less
Armature release time (ms) Note)2	50 or less	50 or less	50 or less
Exciting current (at DC24 V) (A)	0.79±10 %	0.79±10 %	0.79±10 %
Releasing voltage (DC) (V)	2 or more	2 or more	2 or more
Exciting voltage (DC) (V)	24±2.4	24±2.4	24±2.4

• **Permissible load** (For details, refer to P.23)

When assembling	Radial load (N)	980	980	980
	Thrust load Direction A (N)	588	588	588
	Thrust load Direction B (N)	686	686	686
When operating	Radial load (N)	686	686	686
	Thrust load A, B-direction (N)	196	196	196

• For details of Note)1 and Note)2, refer to P.23.
• Dimensions of Motor, refer to P.19.
*1 ○□△ : Represents the motor specifications. (refer to "Model designation" P.4.)
*2 ● : Represents the driver specifications. (refer to "Model designation" P.4.)
*3 When using a rotary encoder as an incremental system (not using multi-turn data), do not connect a battery for absolute encoder.

Torque characteristics (at AC400 V of power voltage <Dotted line represents the torque at 10 % less supply voltage.>)

With oil seal

0.85 kW

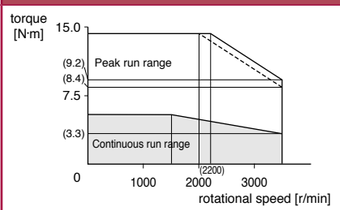

1.3 kW

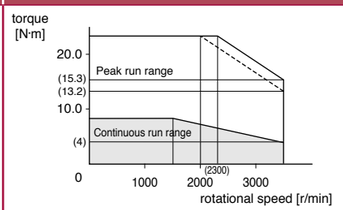

1.8 kW

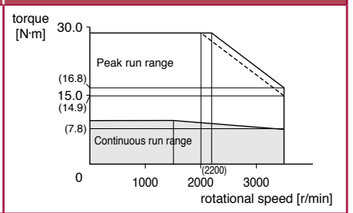

<Cautions> Reduce the moment of inertia ratio if high speed response operation is required.
Dimensions are subject to change without notice. Contact us or a dealer for the latest information.
Read the Instruction Manual carefully and understand all precautions and remarks before using the products.
Please avoid the motor, or equipment containing the motor to be distributed to Japan, or other regions through Japan.

Special Order Product | 400 V

MGMF 2.4 kW to 4.4 kW

[Middle inertia Low speed/ High torque type 176 mm sq.] IP67

• Please contact us for more information.

Specifications

			2.4 kW	2.9 kW	4.4 kW
			AC400 V	AC400 V	AC400 V
Motor model *1			MGMF244○1□△M	MGMF294○1□△M	MGMF444○1□△M
Applicable driver *2	Model No.	Multifunction type	MFDLTA4●F	MFDLTB4●F	MFDLTB4●F
	Frame symbol		F-frame	F-frame	F-frame
Power supply capacity		(kVA)	5.2	5.2	7.8
Rated output		(W)	2400	2900	4400
Rated torque		(N·m)	15.3	18.5	28.0
Continuous stall torque		(N·m)	15.3	18.5	28.0
Max. torque		(N·m)	45.8	55.4	70.0
Rated current		(A(rms))	8.0	9.7	13.8
Max. current		(A(o-p))	34.0	41.0	48.0
Rated speed		(r/min)	1500	1500	1500
Max. speed		(r/min)	3000	3500	3000
Rotor inertia ($\times10^{-4}$ kg·m^2)	Without brake		46.9	46.9	58.2
	With brake		52.3	52.3	63.0
Recommended moment of inertia ratio of the load and the rotor Note)1			10 times or less	10 times or less	10 times or less
Rotary encoder specifications *3			23-bit Absolute	23-bit Absolute	23-bit Absolute
	Resolution per single turn		8388608	8388608	8388608

• **Brake specifications** (For details, refer to P.24)

(This brake will be released when it is energized. Do not use this for braking the motor in motion.)

Static friction torque (N·m)	25.0 or more	25.0 or more	44.1 or more
Armature pull in time (ms)	80 or less	80 or less	150 or less
Armature release time (ms) Note)2	25 or less	25 or less	30 or less
Exciting current (at DC24 V) (A)	1.29±10 %	1.29±10 %	1.29±10 %
Releasing voltage (DC) (V)	2 or more	2 or more	2 or more
Exciting voltage (DC) (V)	24±2.4	24±2.4	24±2.4

• **Permissible load** (For details, refer to P.23)

When assembling	Radial load (N)	1666	1666	1666
	Thrust load Direction A (N)	784	784	784
	Thrust load Direction B (N)	980	980	980
When operating	Radial load (N)	1176	1176	1470
	Thrust load A, B-direction (N)	490	490	490

• For details of Note)1 and Note)2, refer to P.23.
• Dimensions of Motor, refer to P.19.
*1 ○□△ : Represents the motor specifications. (refer to "Model designation" P.4.)
*2 ● : Represents the driver specifications. (refer to "Model designation" P.4.)
*3 When using a rotary encoder as an incremental system (not using multi-turn data), do not connect a battery for absolute encoder.

Torque characteristics (at AC400 V of power voltage <Dotted line represents the torque at 10 % less supply voltage.>)

With oil seal

2.4 kW

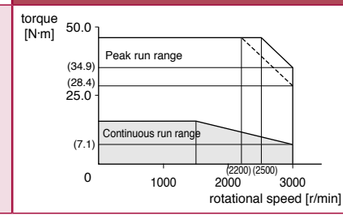

2.9 kW

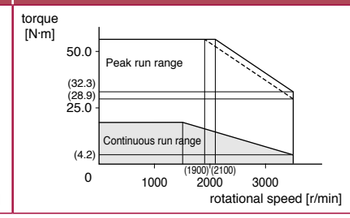

4.4 kW

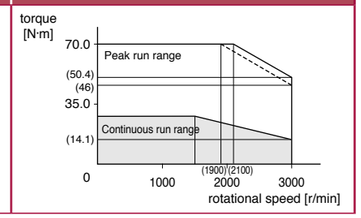

<Cautions> Reduce the moment of inertia ratio if high speed response operation is required.
Dimensions are subject to change without notice. Contact us or a dealer for the latest information.
Read the Instruction Manual carefully and understand all precautions and remarks before using the products.
Please avoid the motor, or equipment containing the motor to be distributed to Japan, or other regions through Japan.

Special Order Product | 400 V

MHMF 200 W to 750 W
[High inertia 60 mm sq./ 80 mm sq.] IP67

• Please contact us for more information.

Specifications

			200 W	400 W	750 W
			AC400 V	AC400 V	AC400 V
Motor model *1			MHMF024○1□△M	MHMF044○1□△M	MHMF084○1□△M
Applicable driver *2	Model No.	Multifunction type	MDDLT44●F	MDDLT44●F	MDDLT54●F
	Frame symbol		D-frame	D-frame	D-frame
Power supply capacity		(kVA)	1.8	1.8	2.4
Rated output		(W)	200	400	750
Rated torque		(N·m)	0.64	1.27	2.39
Continuous stall torque		(N·m)	0.76	1.40	2.86
Max. torque		(N·m)	2.23	4.46	8.36
Rated current		(A(rms))	0.8	1.1	2.0
Max. current		(A(o-p))	3.8	5.3	9.8
Rated speed		(r/min)	3000	3000	3000
Max. speed		(r/min)	6500	6500	6000
Rotor inertia ($\times10^{-4}$ kg·m^2)	Without brake		0.29	0.56	1.56
	With brake		0.31	0.58	1.66
Recommended moment of inertia ratio of the load and the rotor Note)1			5 times or less	5 times or less	5 times or less
Rotary encoder specifications *3			23-bit Absolute	23-bit Absolute	23-bit Absolute
	Resolution per single turn		8388608	8388608	8388608

• **Brake specifications** (For details, refer to P.24)
(This brake will be released when it is energized. Do not use this for braking the motor in motion.)

Static friction torque (N·m)	1.6 or more	1.6 or more	3.8 or more
Armature pull in time (ms)	50 or less	50 or less	70 or less
Armature release time (ms) Note)2	20 or less	20 or less	20 or less
Exciting current (at DC24 V) (A)	0.36	0.36	0.42
Releasing voltage (DC) (V)	1 or more	1 or more	1 or more
Exciting voltage (DC) (V)	24±2.4	24±2.4	24±2.4

• **Permissible load** (For details, refer to P.23)

When assembling	Radial load (N)	392	392	686
	Thrust load Direction A (N)	147	147	294
	Thrust load Direction B (N)	196	196	392
When operating	Radial load (N)	245	245	392
	Thrust load A, B-direction (N)	98	98	147

• For details of Note)1 and Note)2, refer to P.23.
• Dimensions of Motor, refer to P.20, 21.
*1 ○□△ : Represents the motor specifications. (refer to "Model designation" P.4.)
*2 ● : Represents the driver specifications. (refer to "Model designation" P.4.)
*3 When using a rotary encoder as an incremental system (not using multi-turn data), do not connect a battery for absolute encoder.

Torque characteristics (at AC400 V of power voltage <Dotted line represents the torque at 10 % less supply voltage.>)

With oil seal

200 W

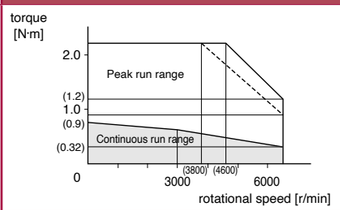

400 W

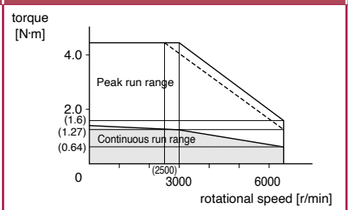

750 W

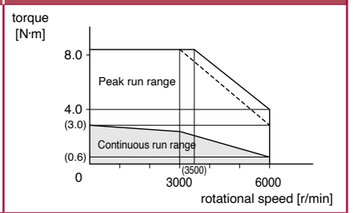

<Cautions> Reduce the moment of inertia ratio if high speed response operation is required.
Dimensions are subject to change without notice. Contact us or a dealer for the latest information.
Read the Instruction Manual carefully and understand all precautions and remarks before using the products.
Please avoid the motor, or equipment containing the motor to be distributed to Japan, or other regions through Japan.

Special Order Product | 400 V

MHMF 1000 W to 1.5 kW
[High inertia 80 mm sq./ 130 mm sq.] IP67

• Please contact us for more information.

Specifications

			1000 W	1.0 kW	1.5 kW
			AC400 V	AC400 V	AC400 V
Motor model *1			MHMF094○1□△M	MHMF104○1□△M	MHMF154○1□△M
Applicable driver *2	Model No.	Multifunction type	MDDLT64●F	MDDLT54●F	MDDLT64●F
	Frame symbol		D-frame	D-frame	D-frame
Power supply capacity		(kVA)	2.9	2.4	2.9
Rated output		(W)	1000	1000	1500
Rated torque		(N·m)	3.18	4.77	7.16
Continuous stall torque		(N·m)	3.34	5.25	7.52
Max. torque		(N·m)	11.1	14.3	21.5
Rated current		(A(rms))	2.9	2.6	4.0
Max. current		(A(o-p))	14.2	11.4	17
Rated speed		(r/min)	3000	2000	2000
Max. speed		(r/min)	6000	3500	3500
Rotor inertia ($\times10^{-4}$ kg·m^2)	Without brake		2.03	22.9	33.4
	With brake		2.13	24.1	34.6
Recommended moment of inertia ratio of the load and the rotor Note)1			5 times or less	5 times or less	5 times or less
Rotary encoder specifications *3			23-bit Absolute	23-bit Absolute	23-bit Absolute
	Resolution per single turn		8388608	8388608	8388608

• **Brake specifications** (For details, refer to P.24)
(This brake will be released when it is energized. Do not use this for braking the motor in motion.)

Static friction torque (N·m)	3.8 or more	13.7 or more	13.7 or more
Armature pull in time (ms)	70 or less	100 or less	100 or less
Armature release time (ms) Note)2	20 or less	50 or less	50 or less
Exciting current (at DC24 V) (A)	0.42	0.79±10 %	0.79±10 %
Releasing voltage (DC) (V)	1 or more	2 or more	2 or more
Exciting voltage (DC) (V)	24±2.4	24±2.4	24±2.4

• **Permissible load** (For details, refer to P.23)

When assembling	Radial load (N)	686	980	980
	Thrust load Direction A (N)	294	588	588
	Thrust load Direction B (N)	392	686	686
When operating	Radial load (N)	392	490	490
	Thrust load A, B-direction (N)	147	196	196

• For details of Note)1 and Note)2, refer to P.23.
• Dimensions of Motor, refer to P.21, 22.
*1 ○□△ : Represents the motor specifications. (refer to "Model designation" P.4.)
*2 ● : Represents the driver specifications. (refer to "Model designation" P.4.)
*3 When using a rotary encoder as an incremental system (not using multi-turn data), do not connect a battery for absolute encoder.

Torque characteristics (at AC400 V of power voltage <Dotted line represents the torque at 10 % less supply voltage.>)

With oil seal

1000 W

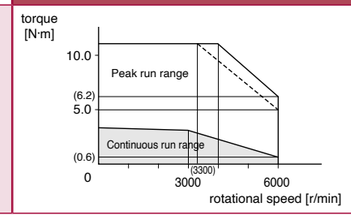

1.0 kW

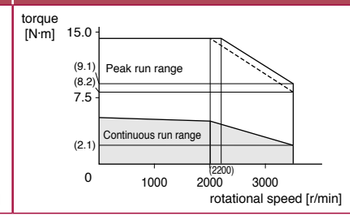

1.5 kW

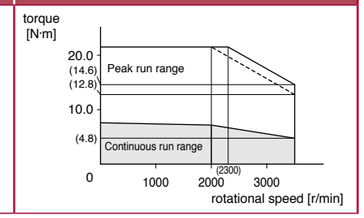

<Cautions> Reduce the moment of inertia ratio if high speed response operation is required.
Dimensions are subject to change without notice. Contact us or a dealer for the latest information.
Read the Instruction Manual carefully and understand all precautions and remarks before using the products.
Please avoid the motor, or equipment containing the motor to be distributed to Japan, or other regions through Japan.

Special Order Product | 400 V

MHMF 2.0 kW to 4.0 kW
[High inertia 176 mm sq.] IP67

• Please contact us for more information.

Specifications

			2.0 kW	3.0 kW	4.0 kW
			AC400 V	AC400 V	AC400 V
Motor model *1			MHMF204○1□△M	MHMF304○1□△M	MHMF404○1□△M
Applicable driver *2	Model No.	Multifunction type	MEDLT84●F	MFDLTA4●F	MFDLTB4●F
	Frame symbol		E-frame	F-frame	F-frame
Power supply capacity		(kVA)	3.8	5.2	7.8
Rated output		(W)	2000	3000	4000
Rated torque		(N·m)	9.55	14.3	19.1
Continuous stall torque		(N·m)	11.5	17.2	22.0
Max. torque		(N·m)	28.7	43.0	57.3
Rated current		(A(rms))	6.4	8.5	10.1
Max. current		(A(o-p))	26.5	37.4	42.5
Rated speed		(r/min)	2000	2000	2000
Max. speed		(r/min)	3500	3500	3500
Rotor inertia ($\times 10^{-4}$ kg·m^2)	Without brake		55.7	85.3	104
	With brake		61.0	90.7	110
Recommended moment of inertia ratio of the load and the rotor Note)1			5 times or less	5 times or less	5 times or less
Rotary encoder specifications *3			23-bit Absolute	23-bit Absolute	23-bit Absolute
	Resolution per single turn		8388608	8388608	8388608

• **Brake specifications** (For details, refer to P.24)
(This brake will be released when it is energized. Do not use this for braking the motor in motion.)

Static friction torque (N·m)	25.0 or more	25.0 or more	25.0 or more
Armature pull in time (ms)	80 or less	80 or less	80 or less
Armature release time (ms) Note)2	25 or less	25 or less	25 or less
Exciting current (at DC24 V) (A)	1.29±10 %	1.29±10 %	1.29±10 %
Releasing voltage (DC) (V)	2 or more	2 or more	2 or more
Exciting voltage (DC) (V)	24±2.4	24±2.4	24±2.4

• **Permissible load** (For details, refer to P.23)

When assembling	Radial load (N)	1666	1666	1666
	Thrust load Direction A (N)	784	784	784
	Thrust load Direction B (N)	980	980	980
When operating	Radial load (N)	784	784	784
	Thrust load A, B-direction (N)	343	343	343

• For details of Note)1 and Note)2, refer to P.23.
• Dimensions of Motor, refer to P.22.
*1 ○□△ : Represents the motor specifications. (refer to "Model designation" P.4.)
*2 ● : Represents the driver specifications. (refer to "Model designation" P.4.)
*3 When using a rotary encoder as an incremental system (not using multi-turn data), do not connect a battery for absolute encoder.

Torque characteristics (at AC400 V of power voltage <Dotted line represents the torque at 10 % less supply voltage.>)

With oil seal

2.0 kW

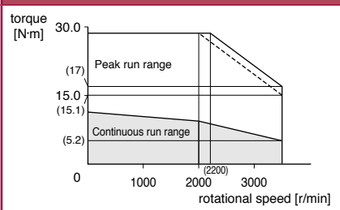

3.0 kW

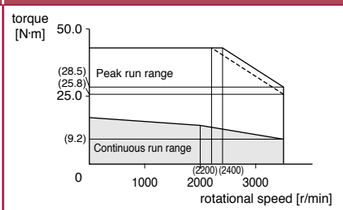

4.0 kW

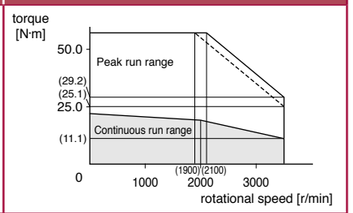

<Cautions> Reduce the moment of inertia ratio if high speed response operation is required.
Dimensions are subject to change without notice. Contact us or a dealer for the latest information.
Read the Instruction Manual carefully and understand all precautions and remarks before using the products.
Please avoid the motor, or equipment containing the motor to be distributed to Japan, or other regions through Japan.

Special Order Product | 400 V

MHMF 5.0 kW
[High inertia 176 mm sq.] IP67

• Please contact us for more information.

Specifications

			5.0 kW
			AC400 V
Motor model *1			MHMF504○1□△M
Applicable driver *2	Model No.	Multifunction type	MFDLTB4●F
	Frame symbol		F-frame
Power supply capacity		(kVA)	7.8
Rated output		(W)	5000
Rated torque		(N·m)	23.9
Continuous stall torque		(N·m)	26.3
Max. torque		(N·m)	71.6
Rated current		(A(rms))	11.8
Max. current		(A(o-p))	51.0
Rated speed		(r/min)	2000
Max. speed		(r/min)	3000
Rotor inertia ($\times 10^{-4}$ kg·m^2)	Without brake		146
	With brake		151
Recommended moment of inertia ratio of the load and the rotor Note)1			5 times or less
Rotary encoder specifications *3			23-bit Absolute
	Resolution per single turn		8388608

• **Brake specifications** (For details, refer to P.24)
(This brake will be released when it is energized. Do not use this for braking the motor in motion.)

Static friction torque (N·m)	44.1 or more
Armature pull in time (ms)	150 or less
Armature release time (ms) Note)2	30 or less
Exciting current (at DC24 V) (A)	1.29±10 %
Releasing voltage (DC) (V)	2 or more
Exciting voltage (DC) (V)	24±2.4

• **Permissible load** (For details, refer to P.23)

When assembling	Radial load (N)	1666
	Thrust load Direction A (N)	784
	Thrust load Direction B (N)	980
When operating	Radial load (N)	784
	Thrust load A, B-direction (N)	343

• For details of Note)1 and Note)2, refer to P.23.
• Dimensions of Motor, refer to P.22.
*1 ○□△ : Represents the motor specifications. (refer to "Model designation" P.4.)
*2 ● : Represents the driver specifications. (refer to "Model designation" P.4.)
*3 When using a rotary encoder as an incremental system (not using multi-turn data), do not connect a battery for absolute encoder.

Torque characteristics (at AC400 V of power voltage <Dotted line represents the torque at 10 % less supply voltage.>)

With oil seal

5.0 kW

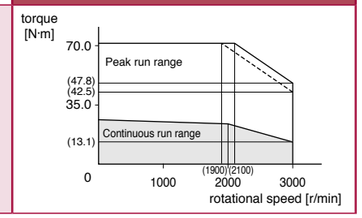

<Cautions> Reduce the moment of inertia ratio if high speed response operation is required.
Dimensions are subject to change without notice. Contact us or a dealer for the latest information.
Read the Instruction Manual carefully and understand all precautions and remarks before using the products.
Please avoid the motor, or equipment containing the motor to be distributed to Japan, or other regions through Japan.

Special Order Product MSMF 1.0 kW to 5.0 kW [Low inertia]

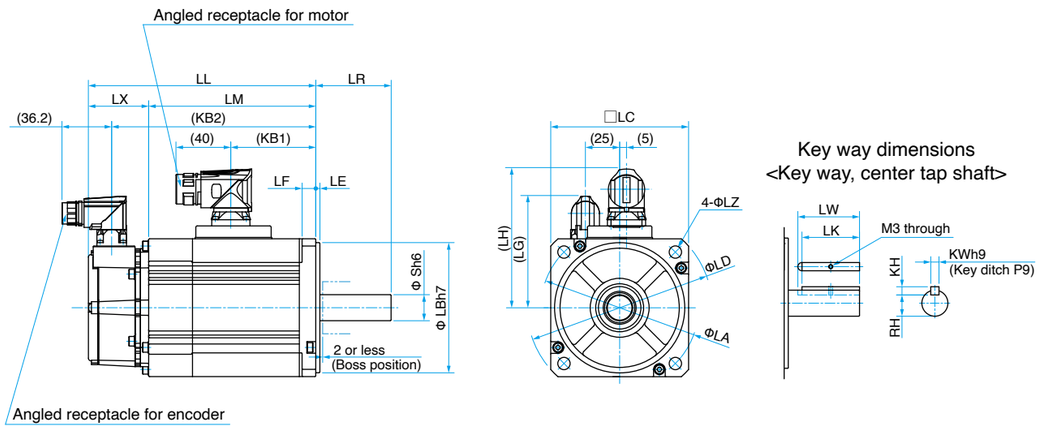

[Unit: mm]

Motor output (kW)			1.0	1.5	2.0	3.0	4.0	5.0
Motor model			**MSMF104 ○1□△M**	**MSMF154 ○1□△M**	**MSMF204 ○1□△M**	**MSMF304 ○1□△M**	**MSMF404 ○1□△M**	**MSMF504 ○1□△M**
LL	23-bit	Without Brake	139	157.5	176.5	188	207	242
		With Brake	166	184.5	203.5	213	235	270
	23-bit Batteryless	Without Brake	145.5	164	183	194.5	213.5	248.5
		With Brake	172.5	191	210	219.5	241.5	276.5
LR			55	55	55	55	65	65
S			19	19	19	22	24	24
LA			115	115	115	145	145	145
LB			95	95	95	110	110	110
LC			100	100	100	120	130	130
LD			135	135	135	162	165	165
LE			3	3	3	3	6	6
LF			10	10	10	12	12	12
LG			81.3	81.3	81.3	81.3	81.3	81.3
LH			101.2	101.2	101.2	101.5	106.5	106.5
LM		Without Brake	95	113.5	132.5	144	163	198
		With Brake	122	140.5	159.5	169	191	226
LX	23-bit		44	44	44	44	44	44
	23-bit Batteryless		50.5	50.5	50.5	50.5	50.5	50.5
LZ			9	9	9	9	9	9
KB1			62	80.5	99.5	121	139	174
KB2		Without Brake	122	140.5	159.5	171	190	225
		With Brake	149	167.5	186.5	196	218	253
Key way dimensions		LW	45	45	45	45	55	55
		LK	42	42	42	41	51	51
		KW	6	6	6	8	8	8
		KH	6	6	6	7	7	7
		RH	15.5	15.5	15.5	18	20	20
Mass (kg)		Without Brake	3.6	4.6	5.6	8.7	11.5	14.5
		With Brake	4.7	5.6	6.6	9.9	13.2	16.1
Angled receptacle for encoder		23-bit	AGC047N0000050A000(TE Connectivity Ltd.) or equivalent model					
		23-bit Batteryless	AGC047N0000050A000(TE Connectivity Ltd.) or equivalent model					
Angled receptacle for motor			BGC106N00001100000(TE Connectivity Ltd.) or equivalent model					

○□△ in the motor model number represents the motor specifications.
Please refer to “[Motor] Model Designation” in P.4.

Special Order Product MDMF 1.0 kW to 5.0 kW [Middle inertia]

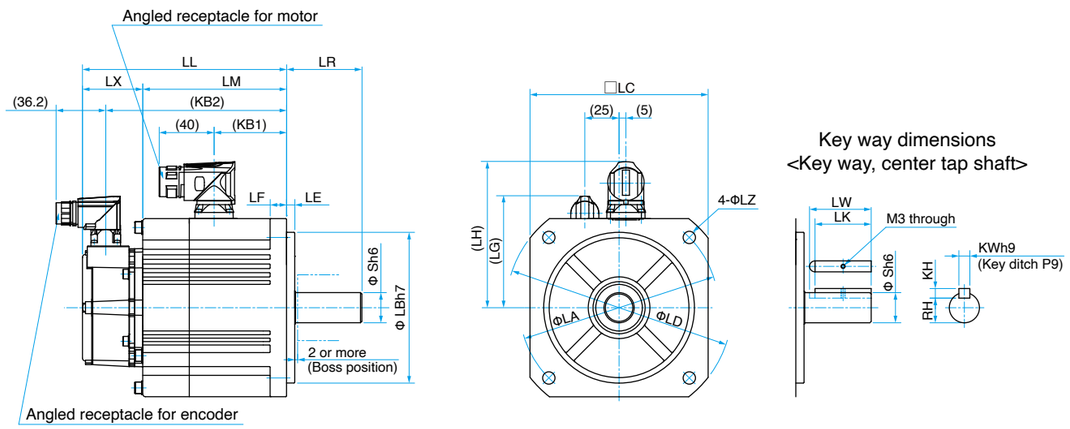

[Unit: mm]

Motor output (kW)			1.0	1.5	2.0	3.0	4.0	5.0
Motor model			**MDMF104 ○1□△M**	**MDMF154 ○1□△M**	**MDMF204 ○1□△M**	**MDMF304 ○1□△M**	**MDMF404 ○1□△M**	**MDMF504 ○1□△M**
LL	23-bit	Without Brake	121	135	149	177	163	178
		With Brake	149	163	177	205	192	207
	23-bit Batteryless	Without Brake	127.5	141.5	155.5	183.5	169.5	184.5
		With Brake	155.5	169.5	183.5	211.5	195.5	213.5
LR			55	55	55	65	70	70
S			22	22	22	24	35	35
LA			145	145	145	145	200	200
LB			110	110	110	110	114.3	114.3
LC			130	130	130	130	176	176
LD			165	165	165	165	233	233
LE			6	6	6	6	3.2	3.2
LF			12	12	12	12	18	18
LG			81.3	81.3	81.3	81.3	81.3	81.3
LH			106.5	106.5	106.5	106.5	129.8	129.8
LM		Without Brake	77	91	105	133	119	134
		With Brake	105	119	133	161	148	163
LX	23-bit		44	44	44	44	44	44
	23-bit Batteryless		50.5	50.5	50.5	50.5	50.5	50.5
LZ			9	9	9	9	13.5	13.5
KB1			53	67	81	109	94	109
KB2		Without Brake	104	118	132	160	146	161
		With Brake	132	146	160	188	175	190
Key way dimensions		LW	45	45	45	55	55	55
		LK	41	41	41	51	50	50
		KW	8	8	8	8	10	10
		KH	7	7	7	7	8	8
		RH	18	18	18	20	30	30
Mass (kg)		Without Brake	4.6	5.7	6.9	9.3	13.4	15.6
		With Brake	6.1	7.2	8.4	10.9	16.8	19.0
Angled receptacle for encoder		23-bit	AGC047N0000050A000(TE Connectivity Ltd.) or equivalent model					
		23-bit Batteryless	AGC047N0000050A000(TE Connectivity Ltd.) or equivalent model					
Angled receptacle for motor			BGC106N00001100000(TE Connectivity Ltd.) or equivalent model					

○□△ in the motor model number represents the motor specifications.
Please refer to “[Motor] Model Designation” in P.4.

Special Order Product MGMF 0.85 kW to 4.4 kW [Middle inertia]

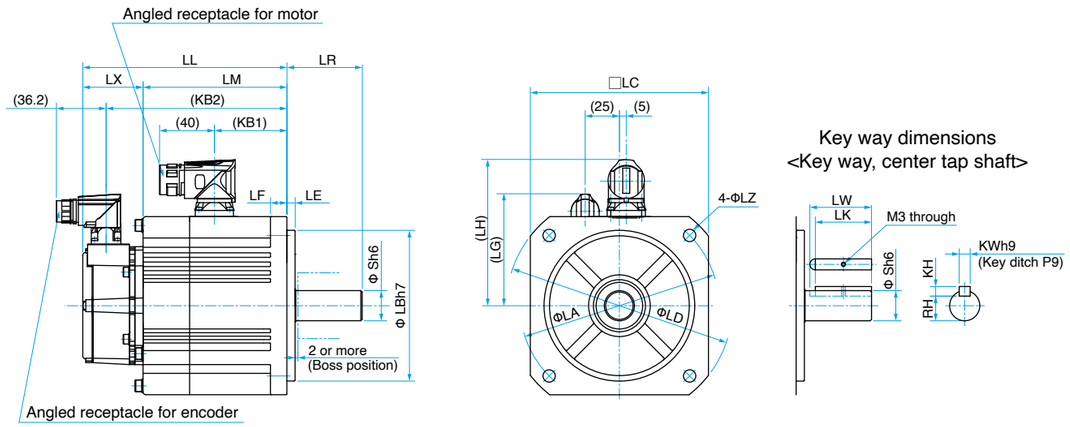

[Unit: mm]

Motor output (kW)			0.85	1.3	1.8	2.4	2.9	4.4
Motor model			**MGMF094 ○1□△M**	**MGMF134 ○1□△M**	**MGMF184 ○1□△M**	**MGMF244 ○1□△M**	**MGMF294 ○1□△M**	**MGMF444 ○1□△M**
LL	23-bit	Without Brake	121	135	149	163	163	178
		With Brake	149	163	177	192	192	207
	23-bit Batteryless	Without Brake	127.5	141.5	155.5	169.5	169.5	184.5
		With Brake	155.5	169.5	183.5	198.5	198.5	213.5
LR			55	55	55	70	70	70
S			22	22	22	35	35	35
LA			145	145	145	200	200	200
LB			110	110	110	114.3	114.3	114.3
LC			130	130	130	176	176	176
LD			165	165	165	233	233	233
LE			6	6	6	3.2	3.2	3.2
LF			12	12	12	18	18	18
LG			81.3	81.3	81.3	81.3	81.3	81.3
LH			106.5	106.5	106.5	129.8	129.8	129.8
LM		Without Brake	77	91	105	119	119	134
		With Brake	105	119	133	148	148	163
LX	23-bit		44	44	44	44	44	44
	23-bit Batteryless		50.5	50.5	50.5	50.5	50.5	50.5
LZ			9	9	9	13.5	13.5	13.5
KB1			53	67	81	94	94	109
KB2		Without Brake	104	118	132	146	146	161
		With Brake	132	146	160	175	175	190
Key way dimensions		LW	45	45	45	55	55	55
		LK	41	41	41	50	50	50
		KW	8	8	8	10	10	10
		KH	7	7	7	8	8	8
		RH	18	18	18	30	30	30
Mass (kg)		Without Brake	4.6	5.7	6.9	13.4	13.4	15.6
		With Brake	6.1	7.2	8.4	16.8	16.8	19.0
Angled receptacle for encoder		23-bit	AGC047N0000050A000(TE Connectivity Ltd.) or equivalent model					
		23-bit Batteryless	AGC047N0000050A000(TE Connectivity Ltd.) or equivalent model					
Angled receptacle for motor			BGC106N00001100000(TE Connectivity Ltd.) or equivalent model					

○□△ in the motor model number represents the motor specifications.
Please refer to "[Motor] Model Designation" in P.4.

Special Order Product MHMF 200 W, 400 W [High inertia]

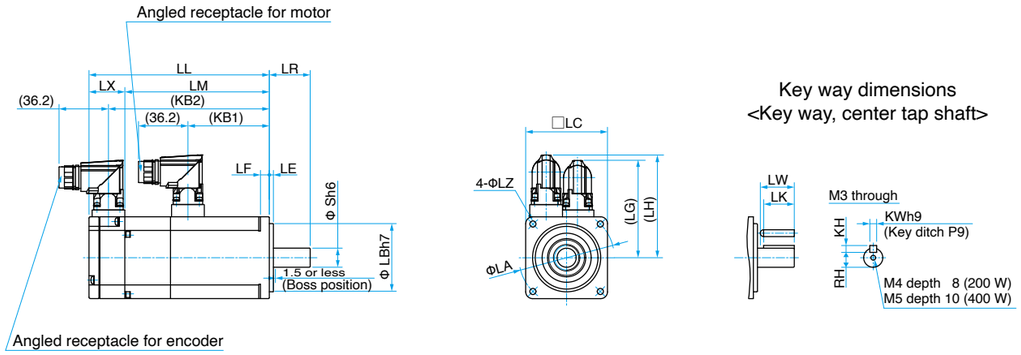

[Unit: mm]

Motor output (W)			200	400
Motor model			**MHMF024○1□9M**	**MHMF044○1□9M**
LL	23-bit	Without Brake	85.8	102.8
		With Brake	115.3	132.3
	23-bit Batteryless	Without Brake	85.8	102.8
		With Brake	115.3	132.3
LR			30	30
S			11	14
LA			70 ±0.2	70 ±0.2
LB			50	50
LC			60	60
LE			3	3
LF			6.5	6.5
LG			71.3	71.3
LH			75.3	75.3
LM		Without Brake	59.5	76.5
		With Brake	89	106
LX	23-bit		26.3	26.3
	23-bit Batteryless		26.3	26.3
LZ			4.5	4.5
KB1			42.7	59.7
KB2		Without Brake	71.5	88.5
		With Brake	101	118
Key way dimensions		LW	20	25
		LK	18	22.5
		KW	4	5
		KH	4	5
		RH	8.5	11
Mass (kg)		Without Brake	1.0	1.4
		With Brake	1.4	1.8
Angled receptacle for encoder		23-bit	AGC047N0000050A000(TE Connectivity Ltd.) or equivalent model	
		23-bit Batteryless	AGC047N0000050A000(TE Connectivity Ltd.) or equivalent model	
Angled receptacle for motor			BGC863N000051A000(TE Connectivity Ltd.) or equivalent model	

○□ in the motor model number represents the motor specifications.
Please refer to "[Motor] Model Designation" in P.4.

Special Order Product MHMF 750 W, 1000 W [High inertia]

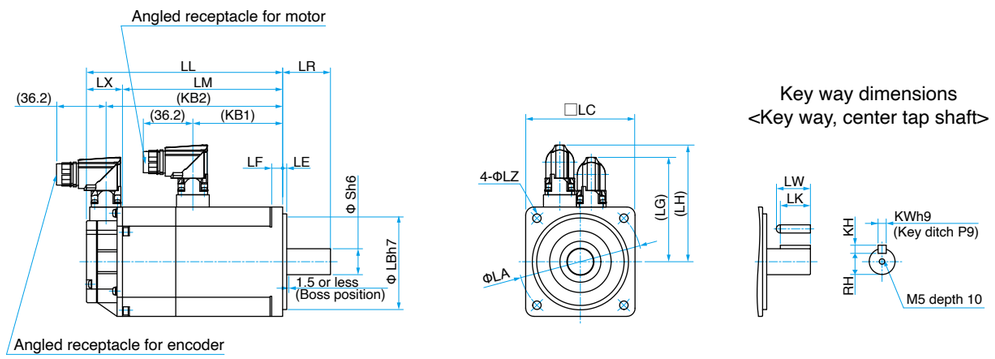

[Unit: mm]

Motor output (W)			750	1000
Motor model			**MHMF084○1□9M**	**MHMF094○1□9M**
LL	23-bit	Without Brake	109.9	122.7
		With Brake	143.5	156.3
	23-bit Batteryless	Without Brake	109.9	122.7
		With Brake	143.5	156.3
LR			35	35
S			19	19
LA			90 ±0.2	90 ±0.2
LB			70	70
LC			80	80
LE			3	3
LF			8	8
LG			76.3	76.3
LH			85.3	85.3
LM		Without Brake	83.6	96.4
		With Brake	117.2	130
LX	23-bit		26.3	26.3
	23-bit Batteryless		26.3	26.3
LZ			6.2	6.2
KB1			65.7	78.5
KB2		Without Brake	95.6	108.4
		With Brake	129.2	142
Key way dimensions		LW	25	25
		LK	22	22
		KW	6	6
		KH	6	6
		RH	15.5	15.5
Mass (kg)		Without Brake	2.4	2.8
		With Brake	3.2	3.6
Angled receptacle for encoder		23-bit	AGC047N0000050A000(TE Connectivity Ltd.) or equivalent model	
		23-bit Batteryless	AGC047N0000050A000(TE Connectivity Ltd.) or equivalent model	
Angled receptacle for motor			BGC863N000051A000(TE Connectivity Ltd.) or equivalent model	

○□ in the motor model number represents the motor specifications.
Please refer to “[Motor] Model Designation” in P.4.

Special Order Product MHMF 1.0 kW to 5.0 kW [High inertia]

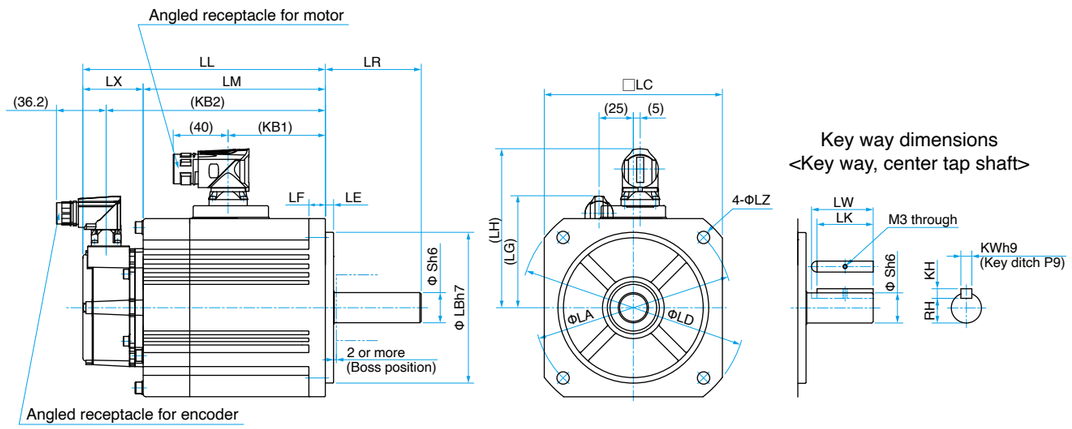

[Unit: mm]

Motor output (kW)			1.0	1.5	2.0	3.0	4.0	5.0
Motor model			**MHMF104 ○1□△M**	**MHMF154 ○1□△M**	**MHMF204 ○1□△M**	**MHMF304 ○1□△M**	**MHMF404 ○1□△M**	**MHMF504 ○1□△M**
LL	23-bit	Without Brake	149	163	163	178	192.5	208.5
		With Brake	177	191	192	207	221.5	237.5
	23-bit Batteryless	Without Brake	155.5	169.5	169.5	184.5	199	215
		With Brake	183.5	197.5	198.5	213.5	228	244
LR			70	70	80	80	80	80
S			22	22	35	35	35	35
LA			145	145	200	200	200	200
LB			110	110	114.3	114.3	114.3	114.3
LC			130	130	176	176	176	176
LD			165	165	233	233	233	233
LE			6	6	3.2	3.2	3.2	3.2
LF			12	12	18	18	18	18
LG			81.3	81.3	81.3	81.3	81.3	81.3
LH			116.2	116.2	139.2	139.2	139.2	139.2
LM		Without Brake	105	119	119	134	148.5	164.5
		With Brake	133	147	148	163	177.5	193.5
LX	23-bit		44	44	44	44	44	44
	23-bit Batteryless		50.5	50.5	50.5	50.5	50.5	50.5
LZ			9	9	13.5	13.5	13.5	13.5
KB1			71	85	80.5	95.5	110	126
KB2		Without Brake	132	146	146	161	175.5	191.5
		With Brake	160	174	175	190	204.5	220.5
Key way dimensions		LW	45	45	55	55	55	55
		LK	41	41	50	50	50	50
		KW	8	8	10	10	10	10
		KH	7	7	8	8	8	8
		RH	18	18	30	30	30	30
Mass (kg)		Without Brake	6.1	7.7	11.3	13.8	16.2	19.6
		With Brake	7.6	9.2	14.6	17.2	19.4	22.8
Angled receptacle for encoder		23-bit	AGC047N0000050A000(TE Connectivity Ltd.) or equivalent model					
		23-bit Batteryless	AGC047N0000050A000(TE Connectivity Ltd.) or equivalent model					
Angled receptacle for motor			BGC106N00001100000(TE Connectivity Ltd.) or equivalent model					

○□△ in the motor model number represents the motor specifications.
Please refer to “[Motor] Model Designation” in P.4.

Environmental Conditions

Item		Conditions	
Ambient temperature		0 ˚C to 40 ˚C (free from freezing)	
Ambient humidity		20 %RH to 85 %RH (free from condensation)	
Storage temperature		–20 ˚C to 65 ˚C (Max.temperature guarantee: 80 ˚C for 72 hours free from condensation)	
Storage humidity		20 %RH to 85 %RH (free from condensation)	
Vibration *1	Motor only	Motor unit	49 m/s² or less X,Y,Z directions But when the motor doesn't operate, 24.5 m/s² or less. (At center of frame, 20 Hz to 3000 Hz, with not more than 1.5 mm amplitude)
		Encoder connector unit and Motor connector unit	Acc. EN60068-2-6 98 m/s² X, Y, Z directions (At mounting position, with the connectors mated) Frequency : 50 Hz to 2000 Hz Frequency change speed : 1 Octave/min Test duration : 10 cycles each X, Y, Z directions
Impact	Motor only	Lower than 98 m/s² (10 G)	
Enclosure rating	Motor only	IP67 (except rotating portion of output shaft and connecting pin part of the motor connector and the encoder connector)	
Altitude		Lower than 1000 m	

*1 After mounting the device, ensure that the vibration resistance performance of the motor and connector meets the defined requirements.

<Note>
Initial setup of rotational direction:
positive = CCW and negative = CW. Pay an extra attention.

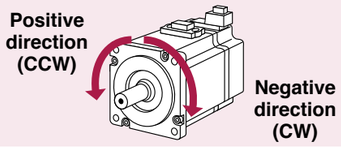

Notes on [Motor specification] page

Note) 1. Consult us or a dealer if the load moment of inertia exceeds the specified value.
Note) 2. Releasing time values represent the ones with DC-cutoff using a varistor.

Permissible Load at Output Shaft

The radial load is defined as a load applied to the output shaft in the right-angle direction. This load is generated when the gear head is coupled to the machine using a chain, belt, etc., but not when the gear head is directly connected to the coupling. As shown in the right figure, the permissible value is determined based on the load applied to the L/2 position of the output shaft. The thrust load is defined as a load applied to the output shaft in the axial direction.

Because the radial load and thrust load significantly affect the life of the bearing, take care not to allow the load during operation to exceed the permissible radial load and thrust load shown in the table below.

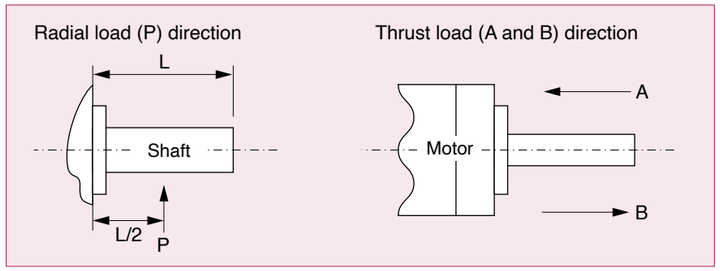

● Specifications of Built-in Holding Brake

Motor series	Motor output	Static friction torque*1 (N·m)	Rotary part inertia*2 (10^{-4} kg·m²)	Armature pull in time*2 (ms)	Armature release time*2 (ms)	Release voltage*1 (DC, V)	Exciting voltage*1 (DC, V)	Exciting current (at DC24 V)*2 (DC, A)	Allowable braking energy ; 1 time each*2 (J)	All allowable braking Energy*2 (J)	Allowable angular acceleration*2 (rad/s²)
MSMF	1.0 kW 1.5 kW 2.0 kW	8.0 or more	0.175	50 or less	15 or less*3	2 or more	24 ± 2.4	0.81 ± 10 %	600	5.0×10^4	10000
	3.0 kW	12.0 or more		80 or less						9.0×10^5	
	4.0 kW	16.2 or more	1.12	110 or less	50 or less*3			0.90 ± 10 %	1470	2.16×10^6	
	5.0 kW	22.0 or more							1545	2.0×10^6	
MDMF	1.0 kW 1.5 kW 2.0 kW	13.7 or more	1.12	100 or less	50 or less*3	2 or more	24 ± 2.4	0.79 ± 10 %	1470	2.16×10^6	10000
	3.0 kW	22.0 or more		110 or less				0.90 ± 10 %	1545	2.0×10^6	
	4.0 kW	25.0 or more	4.7	80 or less	25 or less*3			1.29 ± 10 %	1800	3.0×10^6	5440
	5.0 kW	44.1 or more	4.1	150 or less	30 or less*3					3.1×10^6	5108
MGMF	0.85 kW 1.3 kW 1.8 kW	13.7 or more	1.12	100 or less	50 or less*3	2 or more	24 ± 2.4	0.79 ± 10 %	1470	2.16×10^6	10000
	2.4 kW 2.9 kW	25.0 or more	4.7	80 or less	25 or less*3			1.29 ± 10 %	1800	3.0×10^6	5440
	4.4 kW	44.1 or more	3.93	150 or less	30 or less*3					3.1×10^6	5108
MHMF	200 W	1.6 or more	0.018	50 or less	20 or less*3	1 or more	24 ± 2.4	0.36 ± 10 %	105	44.1×10^3	30000
	400 W										
	750 W	3.8 or more	0.075	70 or less				0.42 ± 10 %	185	80.0×10^3	
	1000 W										
	1.0 kW 1.5 kW	13.7 or more	1.12	100 or less	50 or less*3	2 or more	24 ± 2.4	0.79 ± 10 %	1470	2.16×10^6	10000
	2.0 kW 3.0 kW 4.0 kW	25.0 or more	4.7	80 or less	25 or less*3			1.29 ± 10 %	1800	3.0×10^6	5440
	5.0 kW	44.1 or more	4.1	150 or less	30 or less*3					3.1×10^6	5108

*1 Value of our delivery inspection.
*2 Representative value at 20 °C.
*3 4.1.3 Surge absorber for motor brake

Driver Specifications A6SF series (Multifunction type) Position, Speed, Torque, Full-closed type

Basic Specifications	Input power		Main circuit	3-phase 380 V +10 % −15 % to 480 V +10 % −15 % 50 Hz / 60 Hz TN (Ground the neutral point)
			Control circuit	DC 24 V ±15 %
	Environment		Temperature	Ambient temperature: 0 ˚C to 55 ˚C (free from freezing) Storage temperature: –20 ˚C to 65 ˚C (Max.temperature guarantee: 80 ˚C for 72 hours free from condensation*1)
			Humidity	Both operating and storage : 20 %RH to 85 %RH (free from condensation*1)
			Altitude	Lower than 1000 m
			Vibration	5.88 m/s^2 or less, 10 Hz to 60 Hz
	Control method			IGBT PWM Sinusoidal wave drive
	Encoder feedback			23-bit (8388608 resolution) absolute encoder, 7-wire serial * When using it as an incremental system (not using multi-turn data), do not connect the battery for absolute encoder. Parameter Pr. 0.15 must be set to “1” (factory settings).
	External scale feedback			A/B phase, homing signal differential input. Serial communication is also supported. Manufacturers that support serial communication scale: Fagor Automation S.Coop., HEIDENHAIN, Magnescale Co., Ltd., Mitutoyo Corporation Nidec Sankyo Corporation, Renishaw plc
	Interface connector	Control signal	Input	General purpose 10 inputs The function of general-purpose input is selected by parameters.
			Output	General purpose 6 outputs The function of general-purpose output is selected by parameters.
		Analog signal	Input	3 inputs (16-bit A/D : 1 input, 12-bit A/D : 2 inputs)
			Output	2 outputs (Analog monitor: 2 output)
		Pulse signal	Input	2 inputs (Photo-coupler input, Line receiver input) Both open collector and line driver interface can be connected. High speed line driver interface can be connected.
			Output	4 outputs (Line driver: 3 output, open collector: 1 output) Line driver output for encoder pulses (A/B/Z signal) or external feedback pulses (EXA/EXB/EXZ signal) open collector output also available for Z or EXZ signal.
	Communication function		USB	USB interface to connect to computers for parameter setting or status monitoring.
			RS232	1:1 communication
			RS485	1: n communication (max 31) (Supports Modbus)
	Safety function			A dedicated connector is provided for Functional Safety.
	Front panel			(1) 5 keys (2) LED (6-digit)
	Regeneration			Built-in regenerative resistor (external resistor is also enabled.)
	Dynamic brake			Built-in
	Control mode			Switching among the following 7 mode is enabled, (1) Position control (2) Speed control (3) Torque control (4) Position/Speed control (5) Position/Torque control (6) Speed/Torque control (7) Full-closed control

*1 Air containing water vapor will become saturated with water vapor as the temperature falls, causing dew.

Function	Control input			(1) servo-ON input (2) Alarm clear input (3) Gain switch input (4) Positive direction drive inhibit input (5) Negative direction drive inhibit input (6) Forced alarm input (7) Inertia ratio switch input
	Control output			(1) Servo-alarm output (2) Servo-ready output (3) External brake off output (4) At-speed output (5) Torque in-limit output (6) Zero speed detection output (7) Warning output (8) Alarm clear attribute output (9) Servo on status output
	Position control	Control input		(1) Deviation counter clear input (2) Command pulse inhibit input (3) Command division/multiplication switch input (4) Anti-vibration switch input (5) Torque limit switch input (6) Control mode switch input
		Control output		(1) In-position output (2) Position command ON/OFF output
		Pulse input	Max. command pulse frequency	500 kpps (Optocoupler interface), 8 Mpps (When using line receiver input multiplied by 4)
			Input pulse signal format	Differential input. Selectable by parameter. ([1]Positive/Negative pulse [2]A/B quadrature [3]Pulse/Direction)
			Electronic gear (Division/Multiplication of command pulse)	Applicable scaling ratio: 1/1000 times to 8000 times Any value of 1 - 2^{30} can be set for both numerator (which corresponds to encoder resolution) and denominator (which corresponds to command pulse resolution per motor revolution), but the combination has to be within the range shown above.
			Smoothing filter	Primary delay filter or FIR type filter is adaptable to the command input
		Analog input	Torque limit command input	Individual torque limit for both positive and negative direction is enabled.
			Torque feed forward input	Analog voltage can be used as torque feed forward input.
		Two-degree-of-freedom control		Available
		Anti-vibration control		Available
		Load variation suppression control		Available
		Block operation		Modbus (RS 232, RS 485) or interface is selectable
	Speed control	Control input		(1) Internal command velocity selection input (2) Speed zero clamp input (3) Velocity command sign input (4) Control mode switch input
		Control output		(1) Speed coincidence output (2) Velocity command ON/OFF output
		Analog input	Velocity command input	Velocity command input with analog voltage is possible. Scale setting and command polarity vary depending on parameters. (6 V/Rated rotational speed: Default)
			Torque limit command input	Individual torque limit for both positive and negative direction is enabled.
			Torque feed forward input	Analog voltage can be used as torque feed forward input.
		Internal velocity command		Switching the internal 8 speed is enabled by command input.
		Soft-start/down function		Individual setup of acceleration and deceleration is enabled, with 0 s to 10 s/1000 r/min. Sigmoid acceleration/deceleration is also enabled.
		Speed zero clamp		Internal velocity command can be clamped to 0 with speed zero clamp input.
		Two-degree-of-freedom control		Available
	Torque control	Control input		Speed zero clamp input, torque command sign input, control mode switch input.
		Control output		(1) Speed coincidence output (2) Speed in-limit output
		Analog input	Torque command input	Torque command input with analog voltage is possible. Scale setting and command polarity vary depending on parameters. (3 V/rated torque Default)
		Speed limit function		Speed limit value with parameter is enabled.
	Full-closed control	Control input		(1) Deviation counter clear input (2) Command pulse inhibit input (3) Command division/multiplication switch input (4) Anti-vibration switch input (5) Torque limit switch input
		Control output		(1) In-position output (2) Position command ON/OFF output
		Pulse input	Max. command pulse frequency	500 kpps (Optocoupler interface), 8 Mpps (When using line receiver input multiplied by 4)
			Input pulse signal format	Differential input. Selectable by parameter. ([1]Positive/Negative pulse [2]A/B quadrature [3]Pulse/Direction)
			Electronic gear (Division/Multiplication of command pulse)	Applicable scaling ratio: 1/1000 times to 8000 times Any value of 1 - 2^{30} can be set for both numerator (which corresponds to encoder resolution) and denominator (which corresponds to command pulse resolution per motor revolution), but the combination has to be within the range shown above.
			Smoothing filter	Primary delay filter or FIR type filter is adaptable to the command input
		Analog input	Torque limit command input	Individual torque limit for both positive and negative direction is enabled.
			Torque feed forward input	Analog voltage can be used as torque feed forward input.
		Setting range of external scale division/multiplication		1/40 times to 1280 times Although ratio of the encoder pulse (numerator) and external scale pulse (denominator) can be arbitrarily set in the range of 1 to 2^{23} for the numerator and in the range of 1 to 2^{23} for the denominator, this product should be used within the aforementioned range.
		Two-degree-of-freedom control		Available
		Anti-vibration control		Available
		Load variation suppression control		Available
		Block operation		Modbus (RS 232, RS 485) or interface is selectable
	Common	Auto tuning		The load inertia is identified in real time by the driving state of the motor operating according to the command given by the controlling device and set up support software “PANATERM”. The gain is set automatically in accordance with the rigidity setting.
		Division of encoder feedback pulse		Set up of any value is enabled (encoder pulses count is the max.).
		Protective function	Hard error	Over-voltage, under-voltage, over-speed, over-load, over-heat, over-current and encoder error etc.
			Soft error	Excess position deviation, command pulse division error, EEPROM error etc.
		Alarm data trace back		Tracing back of alarm data is available

Driver Specifications A6NF series (Multifunction type)

Basic Specifications	Input power		Main circuit	3-phase 380 V +10 % –15 % to 480 V +10 % –15 % 50 Hz / 60 Hz TN (Ground the neutral point)
			Control circuit	DC 24 V ±15 %
	Environment		Temperature	Ambient temperature: 0 ˚C to 55 ˚C (free from freezing) Storage temperature: –20 ˚C to 65 ˚C (Max.temperature guarantee: 80 ˚C for 72 hours free from condensation*1)
			Humidity	Both operating and storage : 20 %RH to 85 %RH (free from condensation*1)
			Altitude	Lower than 1000 m
			Vibration	5.88 m/s^2 or less, 10 Hz to 60 Hz
	Control method			IGBT PWM Sinusoidal wave drive
	Encoder feedback			23-bit (8388608 resolution) absolute encoder, 7-wire serial * When using it as an incremental system (not using multi-turn data), do not connect the battery for absolute encoder. Parameter Pr. 0.15 must be set to “1” (factory settings).
	External scale feedback			A/B phase, homing signal differential input. Serial communication is also supported. Manufacturers that support serial communication scale: Fagor Automation S.Coop., HEIDENHAIN, Magnescale Co., Ltd., Mitutoyo Corporation Nidec Sankyo Corporation, Renishaw plc
	Interface connector	Control signal	Input	Each 8 input can be assigned by the parameter.
			Output	Each 3 output can be assigned by the parameter.
		Analog signal	Output	2 outputs for analog monitors 1 and 2
		Pulse signal	Output	Line driver output for encoder pulses (A/B phase signal) or external scale pulses.
	Communication	Realtime Express (RTEX)		Communication for transmission of a real-time operation command, the parameter setting, or the status monitoring.
		USB		USB interface to connect to computers (setup support software PANATERM) for parameter setting or status monitoring.
	Safety terminal			Terminal to support safety function.
	Front panel			(1) 7 segment LED (double digits) (2) Network status LED (LINK,COM) (3) Rotary switch for node address setting (4) Analog monitor output (Analog monitors 1 and 2)
	Regeneration			Built-in regenerative resistor (External regenerative resistor is also available)
	Dynamic brake			Built-in
	Control mode			(1) Semi-closed control Position control: Profile position control (PP), Cyclic position control (CP) Velocity control: Cyclic velocity control (CV) Torque control: Cyclic torque control (CT) (2) Full-closed control Position control: Profile position control (PP), Cyclic position control (CP) • The two modes, [1] and [2] above are switched by parameters. • Switch PP/CP/CV/CT mode according to the RTEX communication command.

*1 Air containing water vapor will become saturated with water vapor as the temperature falls, causing dew.

Function	Position control	Control input	Positive direction drive inhibit input, Negative direction drive inhibit, Latch signal, Near home position, etc
		Control output	Positioning completion etc.
		Position command input: Input mode	Command type by RTEX command
		Position command input: Smoothing filter	Either a primary delay filter or a FIR type filter can be selected against command input.
		Damping control	Available (Up to 3 frequency settings,out of 4 settings in total,can be used simultaneously.)
		Model type damping filter	Available (2 filter available used simultaneously)
		Feed forward function	Available（speed/torque）
		Load variation suppression control	Available
		Gain 3 switching function	Available
		Quadrant glitch inhibit function	Available
		Two-degree-of-freedom control mode	Available
		Motor operatable setup function	Available
		External scale position information monitor	Available
		Other available functions	Friction torque compensation, Torque limit switching function, Torque saturation protection function, Single-turn absolute function, Continuous rotating absolute encoder function
	Speed control	Control input	Positive direction drive inhibit input , Negative direction drive inhibit, Latch signal, etc
		Control output	At speed etc.
		Position command input: Input mode	Command type by RTEX command
		Soft start/slowdown function	0 s to 10 s / 1000 r/min Acceleration and deceleration can be set separately. S-curve acceleration/deceleration is also available.
		Feed forward function	Available（torque）
		Load variation suppression control	Available
		Two-degree-of-freedom control mode	Available（standard type）
		External scale position information monitor	Available
		Other available functions	Friction torque compensation, Torque limit switching function, Torque saturation protection function, Single-turn absolute function, Continuous rotating absolute encoder function
	Torque control	Control input	Positive direction drive inhibit input, Negative direction drive inhibit, Latch signal, etc
		Control output	At speed etc.
		Position command input: Input mode	Command type by RTEX command
		Speed limit function	Speed limit value can be set by parameter. (Switched by RTEX command.)
		External scale position information monitor	Available
		Other available functions	Single-turn absolute function Continuous rotating absolute encoder function
	Full-closed control	Control input	Positive direction drive inhibit input , Negative direction drive inhibit, Latch signal, Near home position , etc
		Control output	Positioning completion etc.
		Position command input: Input mode	Command type by RTEX command
		Position command input: Smoothing filter	Either a primary delay filter or a FIR type filter can be selected against command input.
		Setting range of external scale division/multiplication.	1/40 times to 125200 times Although the ratio of the encoder pulse (numerator) and external scale pulse (denominator) can be set anywhere between the range of 1 to 2^{23} for the numerator and 1 to 2^{23} for the denominator, Please use within the range indicated above.
		Damping control	Available(Up to 3 frequency settings,out of 4 settings in total,can be used simultaneously.)
		Feed forward function	Available（speed/torque）
		Load variation suppression control	Available
		Gain 3 switching function	Available
		Hybrid vibration suppression function	Available
		Quadrant glitch inhibit function	Available
		Two-degree-of-freedom control mode	Available（standard type）
		Motor operatable setup function	Available
		External scale position information monitor	Available
		Other available functions	Friction torque compensation, Torque limit switching function, Torque saturation protection function
	Common	Electronic gear ratio setting	Applicable scaling ratio: 1/1000 to 8000 Although any value of 1 to 2^{30} (numerator) and any value of 1 to 2^{30} (denominator) can be used,resulting value should be within the range shown above.
		Auto tuning	Identifies the load inertia real-time and automatically sets up the gain that meets the stiffness setting when the motor is running with upper and internal operation commands.
		Notch filter	Available (5 filters available)
		Gain switching function	Available
		2-step torque filter	Available
		Position comparison output function	Available
		Protective function	Over-voltage, under-voltage, over-speed, over-load, over-heat, over-current, encoder error, excess position deviation, EEPROM error etc.
		Alarm data trace back function	Tracing back of alarm data is available
		Deterioration diagnosis function	Available

D-frame (400 V)

Unit [mm]

XA: Power supply input connector
XB: Motor output connector
XC: Regenerative resistor connector
XD: Control power supply Input connector

X1: USB connector
X2: RS232/485 communication connector
X3: Safety function connector
X4: Interface connector
X5: For external scale connection
X6: For encoder connection

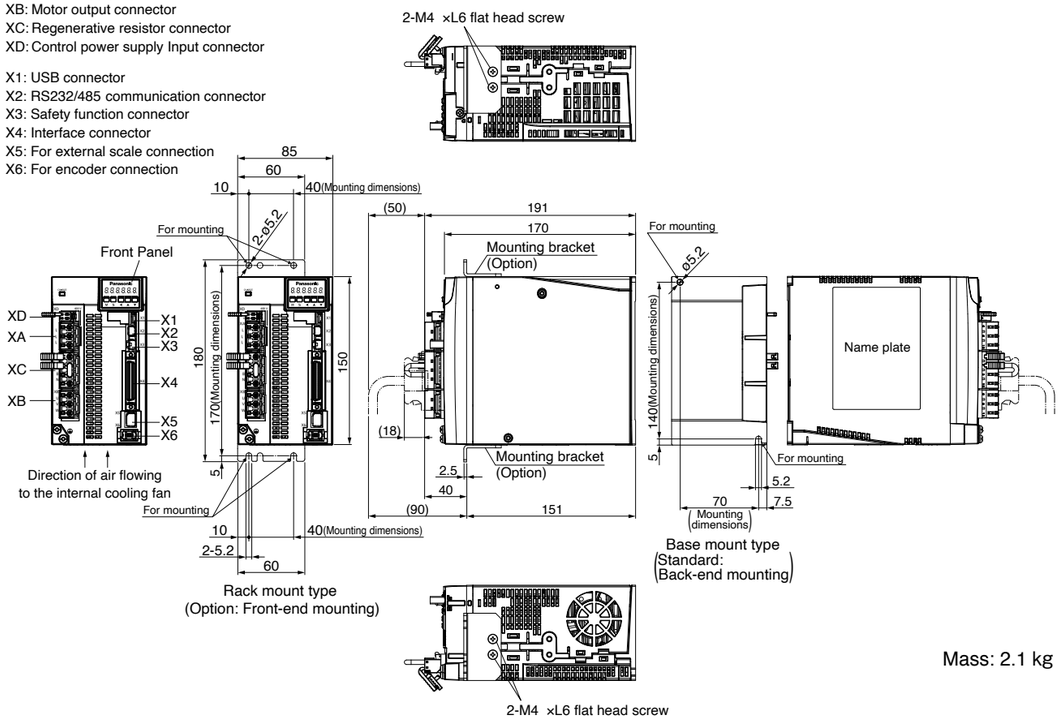

Mass: 2.1 kg

D-frame: Connector of driver side		
Connector XA	S03B-JTSLSS-GSANYR (or equivalent)	J.S.T. Mfg. Co., Ltd.
Connector XB	S03B-JTSLSK-GSANXR (or equivalent)	J.S.T. Mfg. Co., Ltd.
Connector XC	S04B-JTSLSK-GSANXR (or equivalent)	J.S.T. Mfg. Co., Ltd.
Connector XD	S02B-J25SK-GGR (or equivalent)	J.S.T. Mfg. Co., Ltd.
Connector X1	UB-M5BR-S14-4S (LF)(SN) (or equivalent)	J.S.T. Mfg. Co., Ltd.
Connector X2	CIF-HS08SS-072-TB (LF) (or equivalent)	J.S.T. Mfg. Co., Ltd.
Connector X3	CIF-HS08SS-071-TB (LF) (or equivalent)	J.S.T. Mfg. Co., Ltd.
Connector X4	DF02R050NA2 (or equivalent)	Japan Aviation Electronics Industry, Ltd.
Connector X5	MUF-RS10SK-GKX-TB (LF) (or equivalent)	J.S.T. Mfg. Co., Ltd.
Connector X6	3E106-2230KV (or equivalent)	Sumitomo 3M
Connector X7	53398-8605 (or equivalent)	Japan Molex Inc.

<Attached to the driver>

Connector of power and motor side		
Connector XA	03JFAT-SAYGSA-L (or equivalent)	J.S.T. Mfg. Co., Ltd.
Connector XB	03JFAT-SAXGSA-L (or equivalent)	J.S.T. Mfg. Co., Ltd.
Connector XC	04JFAT-SAXGSA-L (or equivalent)	J.S.T. Mfg. Co., Ltd.
Connector XD	02MJFAT-SAGF (or equivalent)	J.S.T. Mfg. Co., Ltd.

E-frame (400 V)

Unit [mm]

X1: USB connector
X2: RS232/485 communication connector
X3: Safety function connector
X4: Interface connector
X5: For external scale connection
X6: For encoder connection

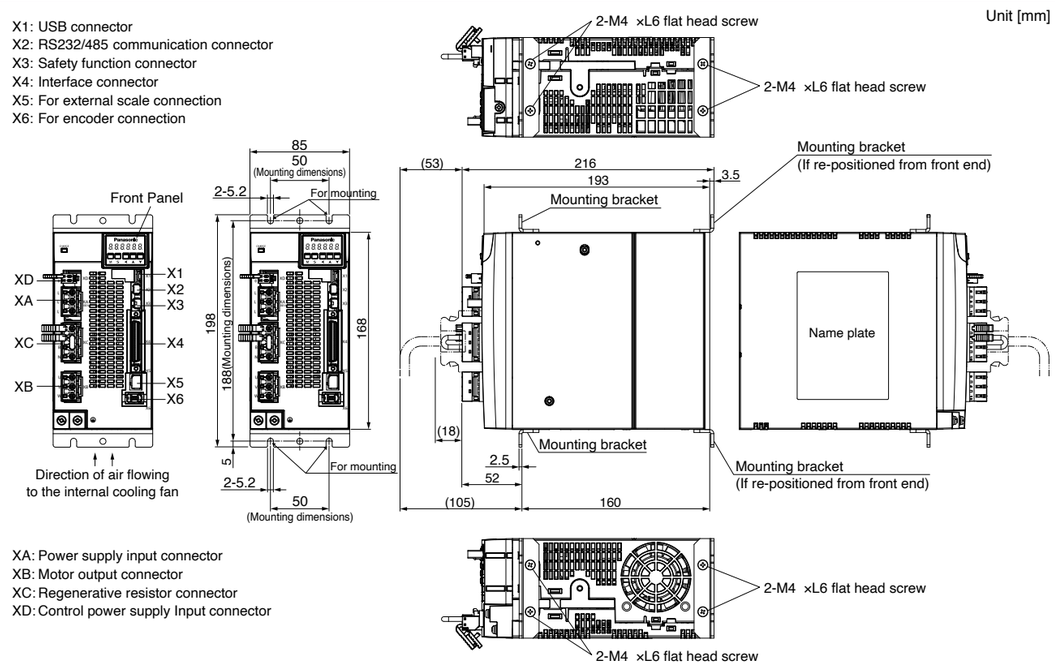

XA: Power supply input connector
XB: Motor output connector
XC: Regenerative resistor connector
XD: Control power supply Input connector

* For connectors X1 to X6, XA to XD for connection to the driver, refer to the those listed in the D-frame table because both frames use the same connectors.

Mass: 2.7 kg

F-frame (400 V)

Unit [mm]

X1: USB connector
X2: RS232/485 communication connector
X3: Safety function connector
X4: Interface connector
X5: For external scale connection
X6: For encoder connection

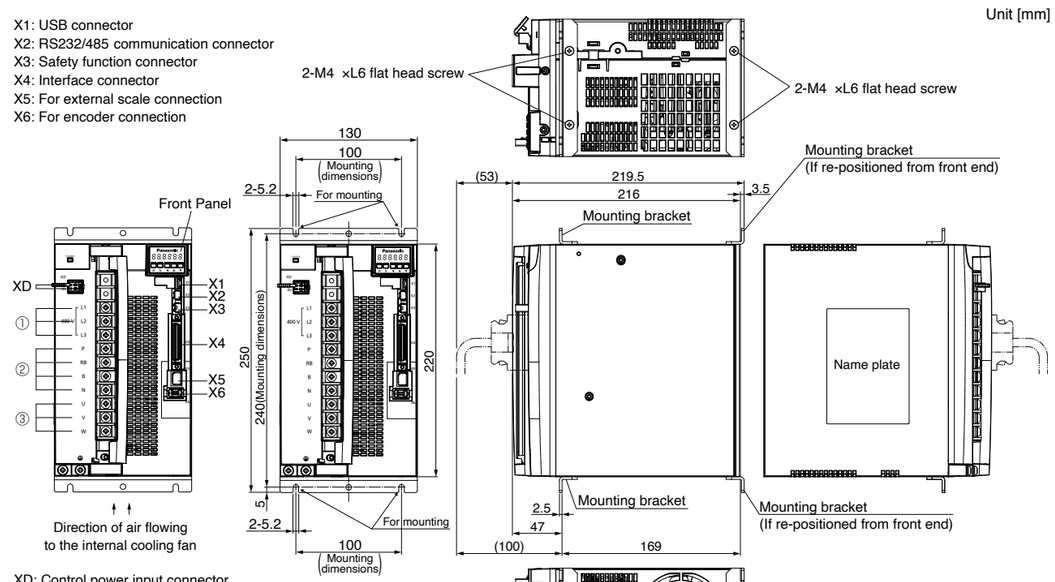

XD: Control power input connector
① Main power input terminals
② Terminals for external regenerative resistor
③ Terminals for motor connection

* For connectors X1 to X6 and XD for connection to the driver, refer to the those listed in the D-frame table because both frames use the same connectors.

Mass: 5.2 kg

D-frame (400 V)

Unit [mm]

X1：USB connector
X3：Safety function connector
X2A：RTEX RX connector
X2B：RTEX TX connector
X4：I/O connector
X5：Feedback scale connector
X6：Encoder connector
X7：For analog monitor signal connection

XA：①Main power input terminals
②Control power input terminals
XB：①Terminals for external regenerative resistor
②Terminals for motor connection

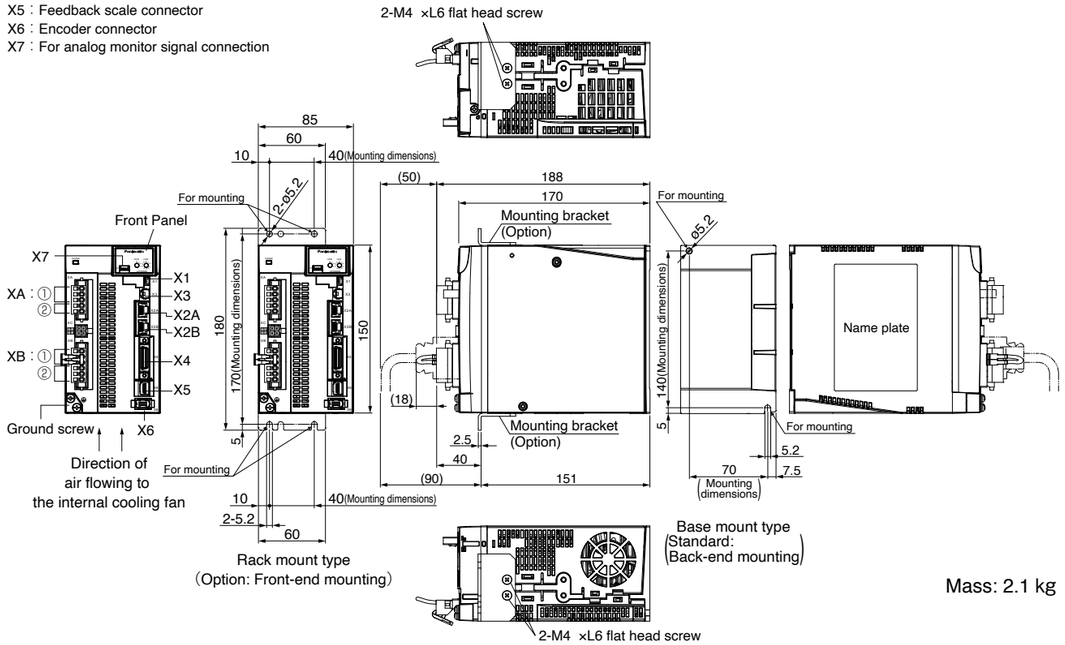

Mass: 2.1 kg

D-frame: Connector of driver side		
Connector XA	S03B-JTSLSS-GSANYR (or equivalent)	J.S.T. Mfg. Co., Ltd.
Connector XB	S03B-JTSLSK-GSANXR (or equivalent)	J.S.T. Mfg. Co., Ltd.
Connector XC	S04B-JTSLSK-GSANXR (or equivalent)	J.S.T. Mfg. Co., Ltd.
Connector XD	S02B-J25SK-GGR (or equivalent)	J.S.T. Mfg. Co., Ltd.
Connector X1	UB-M5BR-S14-4S (LF)(SN) (or equivalent)	J.S.T. Mfg. Co., Ltd.
Connector X3	CIF-HS08SK-071-TB (or equivalent)	J.S.T. Mfg. Co., Ltd.
Connector X2A	MOD-WRJ88LY1G-TP+ (or equivalent)	HONDA TSUSHIN KOGYO CO., LTD.
Connector X2B	MOD-WRJ88LY1G-TP+ (or equivalent)	HONDA TSUSHIN KOGYO CO., LTD.
Connector X4	DF02R026NA2 (or equivalent)	Japan Aviation Electronics Ind.
Connector X5	MUF-RS10SK-GKX-TB (LF) (or equivalent)	J.S.T. Mfg. Co., Ltd.
Connector X6	3E106-2230KV (or equivalent)	Sumitomo 3M
Connector X7	53398-8605 (or equivalent)	Japan Molex Inc.

<Attached to the driver>

Connector of power and motor side		
Connector XA	03JFAT-SAYGSA-L	J.S.T. Mfg. Co., Ltd.
Connector XB	03JFAT-SAXGSA-L	J.S.T. Mfg. Co., Ltd.
Connector XC	04JFAT-SAXGSA-L (or equivalent)	J.S.T. Mfg. Co., Ltd.
Connector XD	02MJFAT-SAGF (or equivalent)	J.S.T. Mfg. Co., Ltd.

E-frame (400 V)

Unit [mm]

X1：USB connector
X3：Safety function connector
X2A：RTEX RX connector
X2B：RTEX TX connector
X4：I/O connector
X5：Feedback scale connector
X6：Encoder connector
X7：For analog monitor signal connection

XA：①Main power input terminals
②Control power input terminals
XB：Terminals for motor connection
XC：Terminals for external regenerative resistor

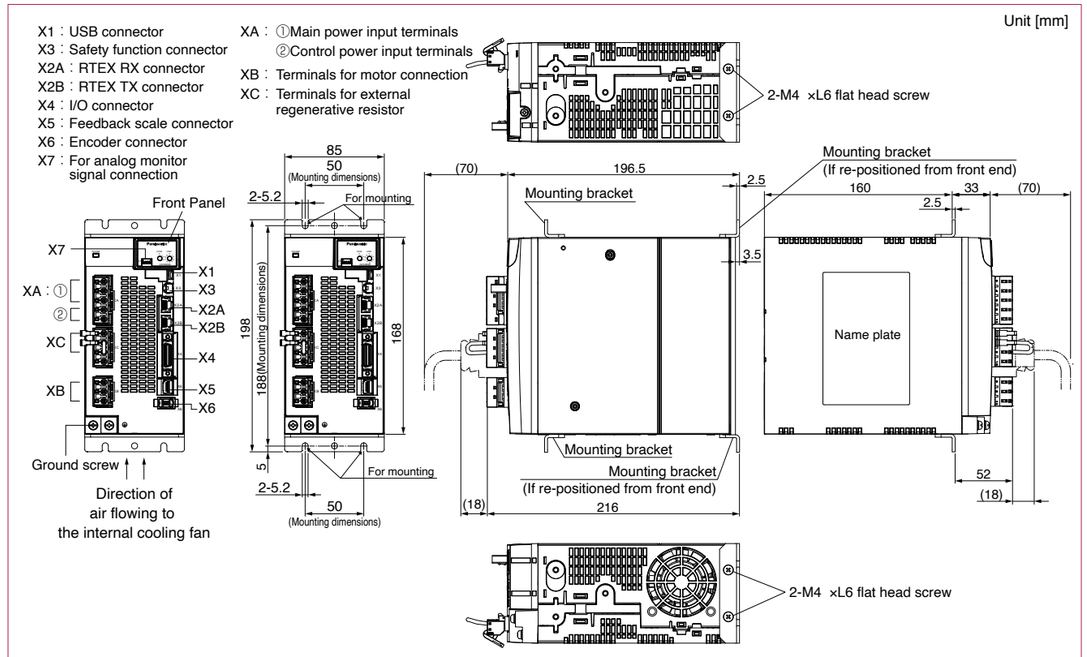

* For connectors X1 to X7, refer to the list provided in the D-frame table because both frames use the same connectors.

Mass: 2.7 kg

F-frame (400 V)

Unit [mm]

X1：USB connector
X3：Safety function connector
X2A：RTEX RX connector
X2B：RTEX TX connector
X4：I/O connector
X5：Feedback scale connector
X6：Encoder connector
X7：For analog monitor signal connection

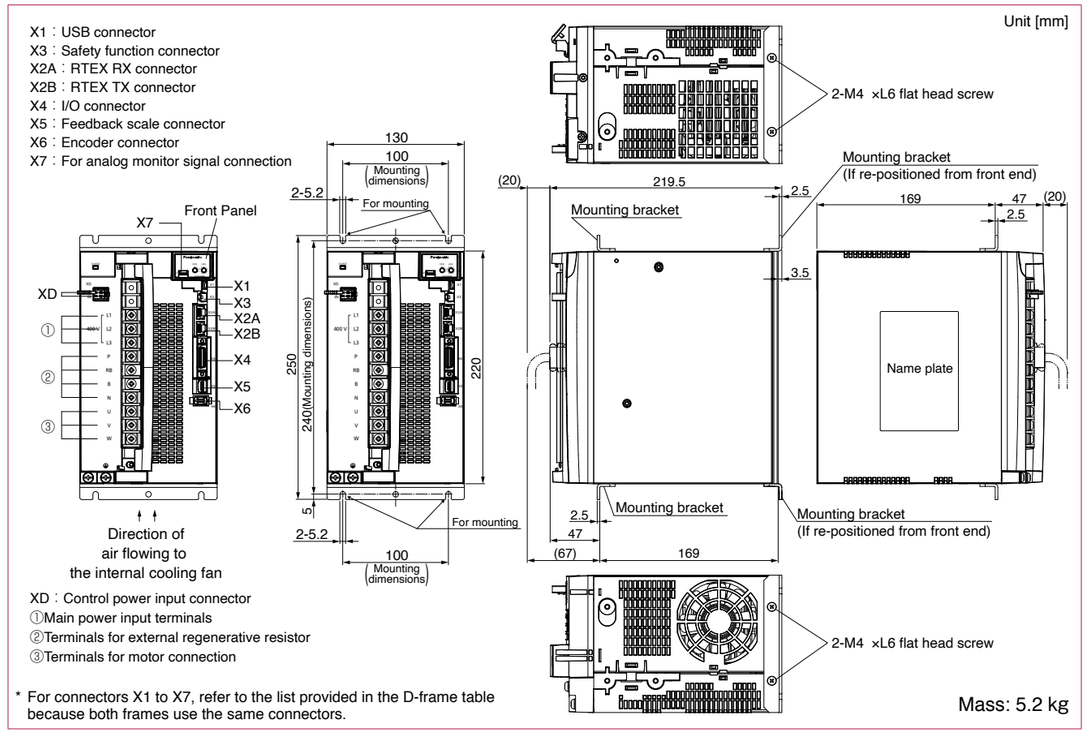

XD：Control power input connector
①Main power input terminals
②Terminals for external regenerative resistor
③Terminals for motor connection

* For connectors X1 to X7, refer to the list provided in the D-frame table because both frames use the same connectors.

Mass: 5.2 kg

D-frame (400 V)

Unit [mm]

X1：USB connector
X3：Safety function connector
X2A：In for EtherCAT
X2B：Out for EtherCAT
X4：I/O connector
X5：Feedback scale connector
X6：Encoder connector
X7：For analog monitor signal connection

XA：①Main power input terminals
②Control power input terminals
XB：①Terminals for external regenerative resistor
②Terminals for motor connection

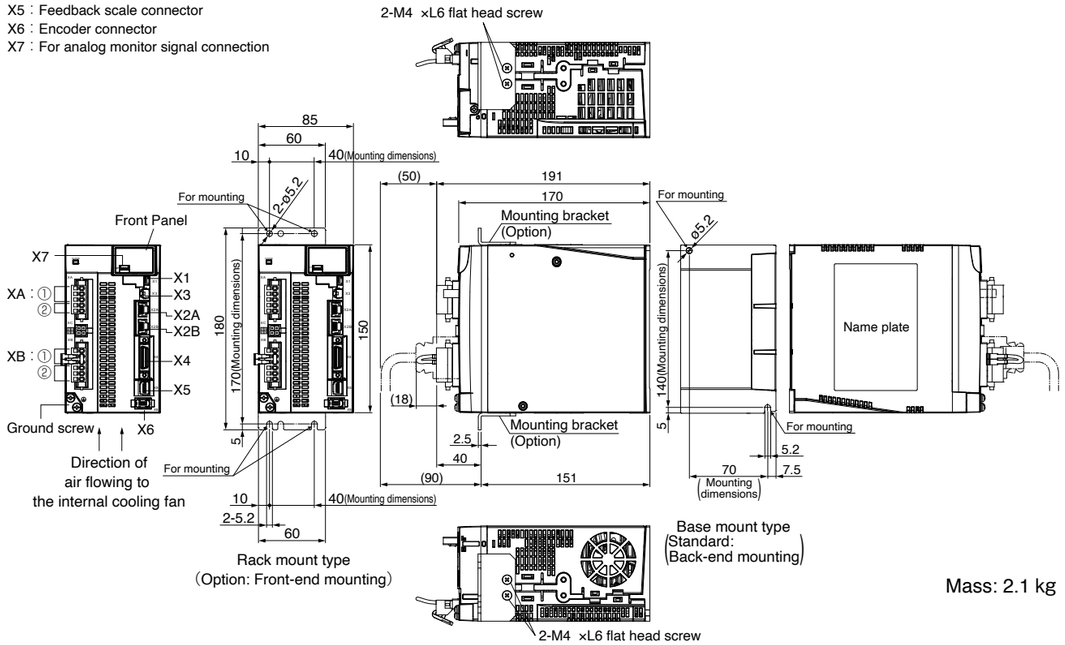

Mass: 2.1 kg

D-frame: Connector of driver side		
Connector XA	S03B-JTSLSS-GSANYR (or equivalent)	J.S.T. Mfg. Co., Ltd.
Connector XB	S03B-JTSLSK-GSANXR (or equivalent)	J.S.T. Mfg. Co., Ltd.
Connector XC	S04B-JTSLSK-GSANXR (or equivalent)	J.S.T. Mfg. Co., Ltd.
Connector XD	S02B-J25SK-GGR (or equivalent)	J.S.T. Mfg. Co., Ltd.
Connector X1	UB-M5BR-S14-4S (LF)(SN) (or equivalent)	J.S.T. Mfg. Co., Ltd.
Connector X3	CIF-HS08SK-071-TB (or equivalent)	J.S.T. Mfg. Co., Ltd.
Connector X2A	MOD-WRJ88LY1G-TP+ (or equivalent)	HONDA TSUSHIN KOGYO CO., LTD.
Connector X2B	MOD-WRJ88LY1G-TP+ (or equivalent)	HONDA TSUSHIN KOGYO CO., LTD.
Connector X4	DF02R026NA2 (or equivalent)	Japan Aviation Electronics Ind.
Connector X5	MUF-RS10SK-GKX-TB (LF) (or equivalent)	J.S.T. Mfg. Co., Ltd.
Connector X6	3E106-2230KV (or equivalent)	Sumitomo 3M
Connector X7	53398-8605 (or equivalent)	Japan Molex Inc.

<Attached to the driver>

Connector of power and motor side		
Connector XA	03JFAT-SAYGSA-L	J.S.T. Mfg. Co., Ltd.
Connector XB	03JFAT-SAXGSA-L	J.S.T. Mfg. Co., Ltd.
Connector XC	04JFAT-SAXGSA-L (or equivalent)	J.S.T. Mfg. Co., Ltd.
Connector XD	02MJFAT-SAGF (or equivalent)	J.S.T. Mfg. Co., Ltd.

E-frame (400 V)

Unit [mm]

X1：USB connector
X3：Safety function connector
X2A：In for EtherCAT
X2B：Out for EtherCAT
X4：I/O connector
X5：Feedback scale connector
X6：Encoder connector
X7：For analog monitor signal connection

XA：①Main power input terminals
②Control power input terminals
XB：Terminals for motor connection
XC：Terminals for external regenerative resistor

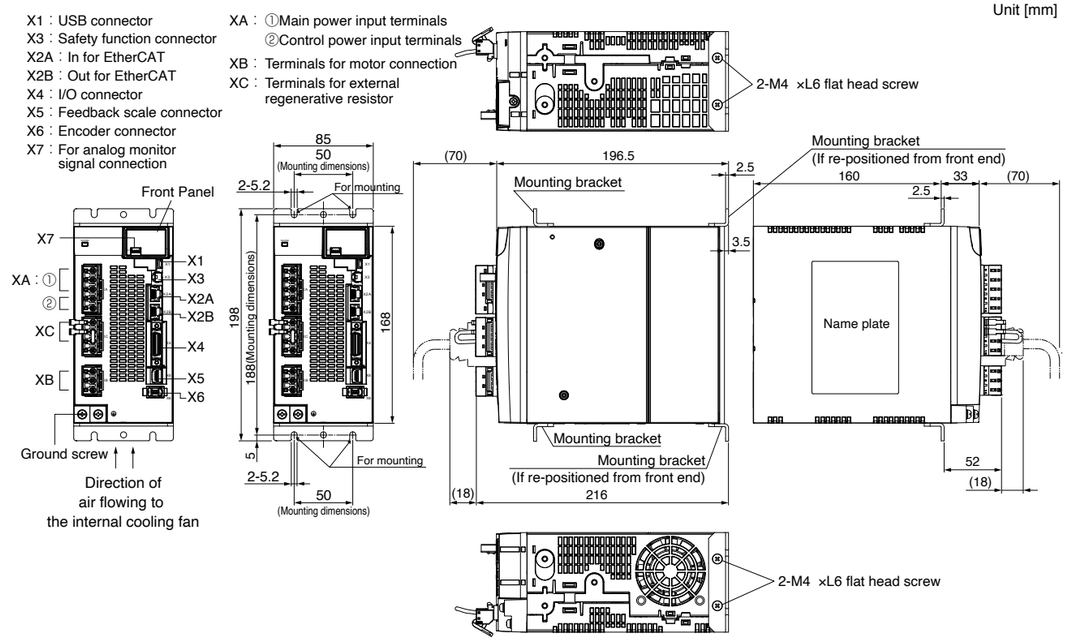

* For connectors X1 to X7, refer to the list provided in the D-frame table because both frames use the same connectors.

Mass: 2.7 kg

F-frame (400 V)

Unit [mm]

X1：USB connector
X3：Safety function connector
X2A：In for EtherCAT
X2B：Out for EtherCAT
X4：I/O connector
X5：Feedback scale connector
X6：Encoder connector
X7：For analog monitor signal connection

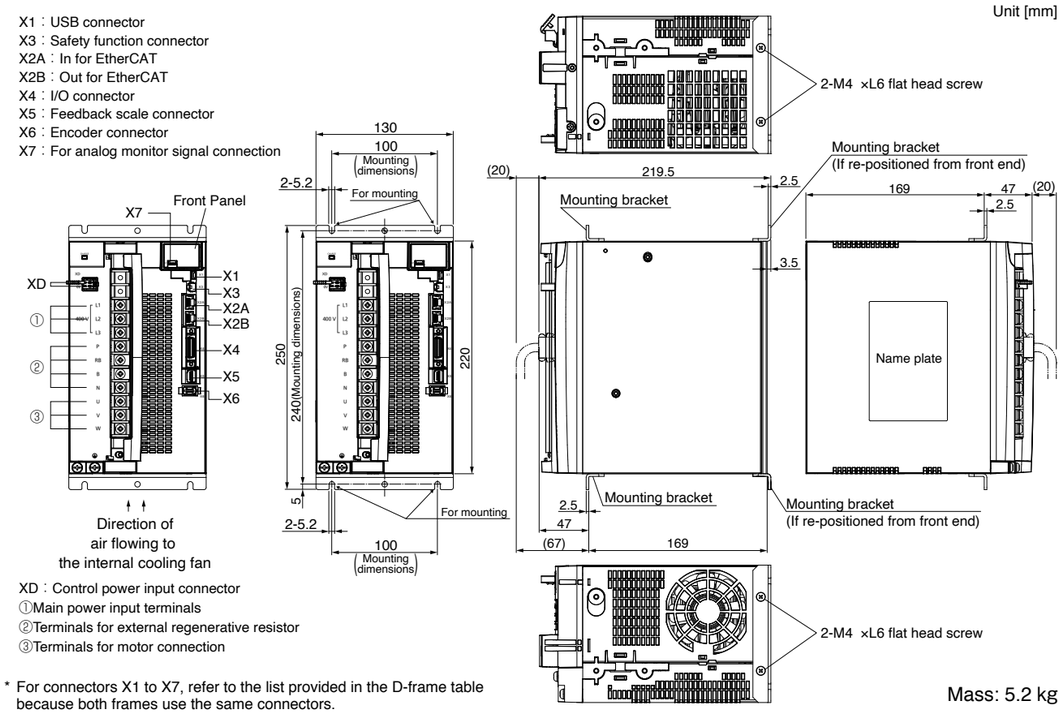

XD：Control power input connector
①Main power input terminals
②Terminals for external regenerative resistor
③Terminals for motor connection

* For connectors X1 to X7, refer to the list provided in the D-frame table because both frames use the same connectors.

Mass: 5.2 kg